ECHO GREENWOOD, LLC
SMITH VALLEY ROAD RETAIL

SMITH VALLEY ROAD AND S MORGANTOWN ROAD
GREENWOOD, INDIANA 46142

CONSTRUCTION DOCUMENTS

AUGUST 9th, 2022

PROJECT TEAM:

DEVELOPER/OWNER
ECHO GREENWOOD, LLC
560 EPSILON DRIVE
PITTSBURGH, PA 15238
PH: (412) 850-5321
CONTACT: JOE TASSONE
EMAIL: jtassone@echorealty.com

CIVIL ENGINEER
CIVIL & ENVIRONMENTAL CONSULTANTS, INC.
530 E. OHIO ST., STE. G
INDIANAPOLIS, IN 46204
PH: (317) 655-7777
CONTACT: AARON HURT
EMAIL: ahurt@cecinc.com

SURVEYOR
CIVIL & ENVIRONMENTAL CONSULTANTS, INC.
530 E. OHIO ST., STE. G
INDIANAPOLIS, IN 46204
PH: (317) 655-7777
CONTACT: ANTHONY SYERS
EMAIL: asyers@cecinc.com

LIST OF CONTACTS:

STORMWATER
JOHNSON COUNTY PLANNING AND ZONING
86 W COURT STREET
FRANKLIN, IN 46131
(317) 346-4352
ATTN: RICHARD HOOVER
rhoover@co.johnson.in.gov

SANITARY SEWER
CITY OF GREENWOOD
367 S WASHINGTON STREET
GREENWOOD, IN 46143
(317) 888-1254
ATTN: KEITH MEIER
meierk@greenwood.in.gov

WATER
TOWN OF BARGERSVILLE WATER AND SEWER
PO BOX 420
BARGERSVILLE, IN 46106
(317) 422-3123
ATTN: RICK RAHE
rrahe@townofbargersville.org

GAS
CENTERPOINT
1800 W 26TH STREET
MUNCIE, IN 47302
(765) 287-2119
ATTN: JON EASTHAM
publicproject@centerpointenergy.com

ELECTRIC
DUKE ENERGY
1000 E MAIN STREET
PLAINFIELD, IN 46168
(317) 838-1564
ATTN: APRIL EDWARDS
die-dline-coord@duke-energy.com

JOHNSON COUNTY R.E.M.C.
PO BOX 309
FRANKLIN, IN 46131
(317) 736-6174 x7630
ATTN: KEVIN SHELLEY
shelleyk@jcremc.com

COMMUNICATIONS
AT&T - DISTRIBUTION
240 N MERIDIAN STREET
ROOM 1791
INDIANAPOLIS, IN 46204
(317) 220-7043
ATTN: MATT SPINDLER
g09871@att.com

METRO FIBERNET, LLC
3701 COMMUNICATIONS WAY
EVANSVILLE, IN 47715
(812) 213-1050
811design@metronet.com

BENCHMARKS:

UNLESS OTHERWISE NOTED, ELEVATIONS SHOWN HEREON ARE BASED UPON AN OPUS SOLUTION AND ARE ON THE 1988 NORTH AMERICAN VERTICAL DATUM (NAVD88). IT IS MY OPINION THAT THE UNCERTAINTY IN THE ELEVATION OF THE PROJECT BENCHMARK DOES NOT EXCEED 0.10 FOOT.

TBM#1: CUT SQUARE ON THE WEST SIDE OF A CONCRETE LID OF A FORCE MAIN MANHOLE ON THE EAST SIDE OF MORGANTOWN ROAD ACROSS FROM THE NORTHERN MOST CURB CUT ENTRANCE TO THE SITE.
ELEV. = 706.84

TBM#2: CUT "X" ON THE ARROW BOLT OF A HYDRANT LOCATED IN THE NORTHWEST QUADRANT OF THE INTERSECTION OF MORGANTOWN AND SMITH VALLEY ROAD.
ELEV. = 695.82

TBM#3: CUT "X" ON THE ARROW BOLT OF A HYDRANT LOCATED IN THE SOUTHWEST CORNER OF THE SITE.
ELEV. = 699.89

UTILITY NOTE:

THE UNDERGROUND UTILITIES SHOWN HAVE BEEN LOCATED FROM FIELD SURVEY INFORMATION AND EXISTING DRAWINGS. THE SURVEYOR MAKES NO GUARANTEES THAT THE UNDERGROUND UTILITIES COMPRISE ALL SUCH UTILITIES IN THE AREA, EITHER IN-SERVICE OR ABANDONED. THE SURVEYOR FURTHER DOES NOT WARRANT THAT THE UNDERGROUND UTILITIES SHOWN ARE IN THE EXACT LOCATION INDICATED ALTHOUGH THE SURVEYOR DOES CERTIFY THAT THEY ARE LOCATED AS ACCURATELY AS POSSIBLE FROM INFORMATION AVAILABLE. THE SURVEYOR HAS NOT PHYSICALLY LOCATED THE UNDERGROUND UTILITIES. INDIANA 811 ONE-CALL PUBLIC UTILITY LOCATE SERVICE TICKET NUMBERS 2204292249, 2204292299, AND 2204292346 WERE ISSUED FOR THIS SITE.

PRIOR TO ANY EXCAVATION FOR UNDERGROUND UTILITIES, THE CONTRACTOR SHALL EXPOSE AND VERIFY LOCATIONS (HORIZONTAL AND VERTICAL) OF ALL EXISTING UTILITIES INCLUDING BUT NOT LIMITED TO GAS, WATER, AND SANITARY SEWER. ANY CONFLICTS SHALL BE REPORTED IMMEDIATELY TO THE ENGINEER AND THE APPROPRIATE AUTHORITIES.

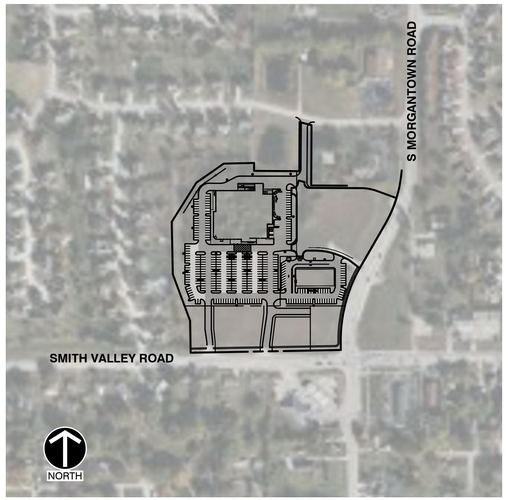

SITE MAP
SCALE: 1"=300'
SCALE IN FEET
0 300 600

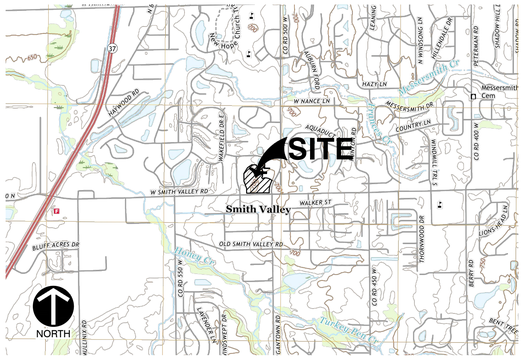

U.S.G.S. MAP
U.S.G.S. 7.5 MIN. TOPOGRAPHIC MAP,
BARGERSVILLE QUADRANGLE, IN DATED: 2019
SCALE: 1"=2000'
SCALE IN FEET
0 2000 4000

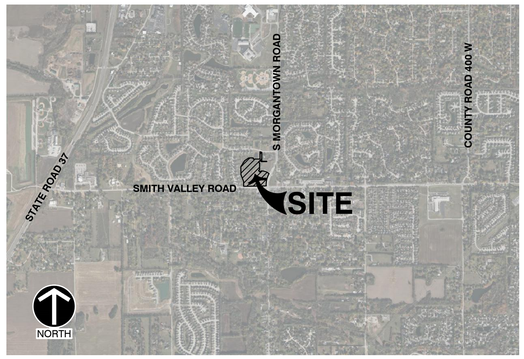

LOCATION MAP
BASE IMAGE FROM MICROSOFT
ACCESSED AUG. 2022
SCALE: 1"=2000'
SCALE IN FEET
0 2000 4000

DRAWING INDEX

SHEET NO.	SHEET TITLE	DRAWING NO.
01	TITLE SHEET	C000
02	TOPOGRAPHIC SURVEY	TOPO
03	TOPOGRAPHIC SURVEY	TOPO
04	TOPOGRAPHIC SURVEY	TOPO
05	EXISTING CONDITIONS & DEMOLITION PLAN	C100
06	OVERALL SITE PLAN	C200
07	SITE PLAN	C201
08	SITE PLAN	C202
09	OVERALL GRADING PLAN	C300
10	GRADING PLAN	C301
11	GRADING PLAN	C302
12	OVERALL DRAINAGE PLAN	C400
13	DRAINAGE PLAN	C401
14	DRAINAGE PLAN	C402
15	OVERALL UTILITY PLAN	C500
16	UTILITY PLAN	C501
17	UTILITY PLAN	C502
18	SANITARY PROFILES	C503
19	OVERALL SITE LANDSCAPE PLAN	C700
20	SITE LANDSCAPE PLAN	C701
21	SITE LANDSCAPE PLAN	C702
22	SITE LANDSCAPE DETAILS & PLANT SCHEDULE	C703
23	SITE DETAILS	C800
24	SITE DETAILS	C801
25	SITE DETAILS	C802
26	SITE DETAILS	C803
27	SITE DETAILS	C804
28	SITE DETAILS	C805
29	OVERALL STORMWATER POLLUTION PREVENTION PLAN	C900
30	STORMWATER POLLUTION PREVENTION PLAN	C901
31	STORMWATER POLLUTION PREVENTION PLAN	C902
32	STORMWATER POLLUTION PREVENTION NOTES	C903
33	STORMWATER POLLUTION PREVENTION DETAILS	C904

PRELIMINARY
NOT FOR CONSTRUCTION

Indiana 811
Know what's below. Call before you dig.

NICHOLAS P. JUSTICE
REGISTERED
No. PE11800757
STATE OF INDIANA
PROFESSIONAL ENGINEER
08/09/2022

SUBMITTAL & REVISION RECORD

NO	DATE	DESCRIPTION

Civil & Environmental Consultants, Inc.
530 E. Ohio Street · Suite G · Indianapolis, IN 46204
317-655-7777 · 877-746-0749
www.cecinc.com

ECHO GREENWOOD, LLC
SMITH VALLEY ROAD RETAIL
SMITH VALLEY & MORGANTOWN ROAD
GREENWOOD, IN

TITLE SHEET

DATE:	AUGUST 9, 2022	DRAWN BY:	JAR
DWG SCALE:	AS NOTED	CHECKED BY:	DRAFT
PROJECT NO:			322-045
APPROVED BY:			DRAFT

DRAWING NO.:
C000

P:\320-009\322-045\-CADD\Dwg\CV01\322045-CV01-C000.dwg[C000] LS:(8/9/2022 - jmahony) - LP: 8/9/2022 2:42 PM

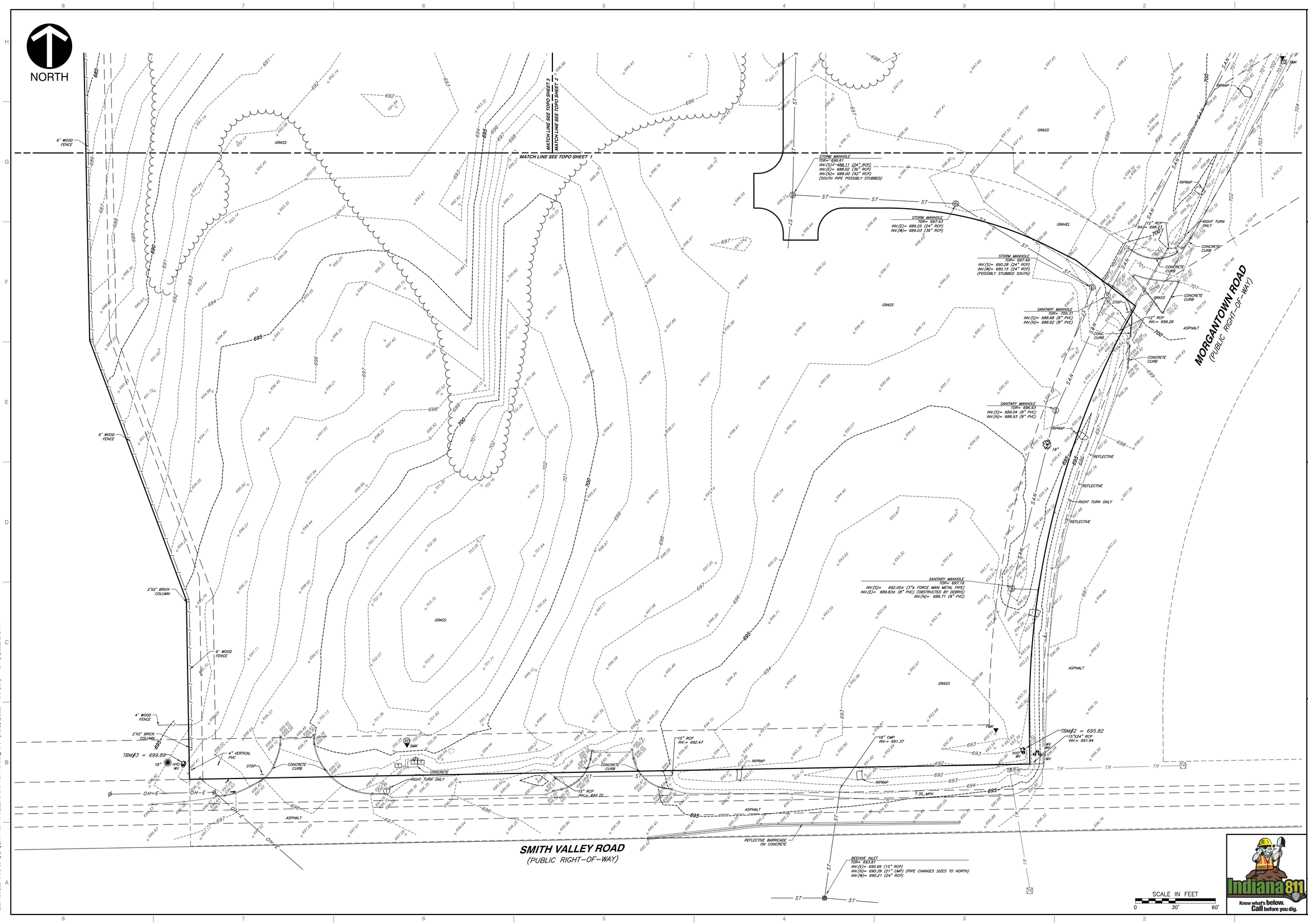

REVISION RECORD		
NO	DATE	DESCRIPTION

Civil & Environmental Consultants, Inc.
530 E. Ohio Street · Suite G · Indianapolis, IN 46204
317-655-7777 · 877-746-0749
www.ceinc.com

ECHO REALTY COMPANY
SMITH VALLEY & MORGANTOWN ROAD
GREENWOOD, INDIANA

TOPOGRAPHIC SURVEY

DATE:	JUNE 2, 2022
DRAWN BY:	CJV
DWG SCALE:	1"=30'
CHECKED BY:	TJT
PROJECT NO:	322-045
APPROVED BY:	DRAFT

Indiana 811
Know what's below. Call before you dig.

DRAWING NO.: **TOPO**

SHEET 1 OF 3

F:\320-000\322-045\-Survey\Dwg\DWG ALTA TOPO\322045-SVGT-ALTA-TOPO.dwg\TOPO-1\ LS:(9/9/2022 - lthompson) - LP: 8/9/2022 2:42 PM

NORTH

BANCROFT LANE
(PUBLIC RIGHT-OF-WAY)

MORGANTOWN ROAD
(PUBLIC RIGHT-OF-WAY)

STORM MANHOLE
TOR= 694.53
INV.(S)= 686.62 (24" RCP)
INV.(N)= 686.62 (24" RCP)

STORM MANHOLE
TOR= 699.58
INV.(E)= 688.42 (18" RCP)
INV.(SW)= 687.74 (18" RCP)

STORM MANHOLE
TOR= 705.62
INV.(SW)= 693.37 (18" RCP)
INV.(E)= 693.27 (15" RCP)
INV.(N)= 693.17 (15" RCP)
INV.(N)= 692.50 (15" RCP)

24" RCP
INV.= 686.68

18" RCP
INV.= 686.64

POND

BEEHIVE INLET
TOR= 692.13
INV.(E)= 690.13 (15" RCP)
INV.(W)= 686.44 (15" RCP)

15" RCP
INV.= 690.23

6" PVC
INV.= 686.44

42" RCP
INV.= 686.62

STORM MANHOLE
TOR= 697.58
INV.(SE)= 686.96 (42" RCP)
INV.(NW)= 686.90 (42" RCP)

SANITARY MANHOLE
TOR= 705.06
INV.(S)= 685.52 (8" PVC)
INV.(N)= 685.42 (8" PVC)

STORM MANHOLE
TOR= 705.90
INV.(S)= 687.25 (42" RCP)
INV.(NW)= 687.15 (42" RCP)

SANITARY MANHOLE
TOR= 704.02
INV.(S)= 687.56 (8" PVC)
INV.(N)= 687.21 (8" PVC)

12" RCP
INV.= 701.39

12" RCP
INV.= 700.43

TBM#1 = 706.84

STORM MANHOLE
TOR= 696.61
INV.(S)= 688.11 (24" RCP)
INV.(E)= 688.02 (36" RCP)
INV.(N)= 688.00 (42" RCP)
(SOUTH PIPE POSSIBLY STUBBED)

STORM MANHOLE
TOR= 697.43
INV.(E)= 689.25 (24" RCP)
INV.(W)= 689.03 (36" RCP)

12" RCP
INV.= 698.23

FARM FENCE

NO NOT-DIG

DUAL 24"

CONCRETE CURB

RIGHT TURN ONLY

ASPHALT

STOP

RIPRAP

GRASS

GRAVEL

MATCH LINE SEE TOPO SHEET 1

MATCH LINE SEE TOPO SHEET 2

MATCH LINE SEE TOPO SHEET 3

SCALE IN FEET
0 30' 60'

Indiana811
Know what's below. Call before you dig.

DRAWING NO.: TOPO
SHEET 1 OF 3

DATE:	JUNE 2, 2022
DRAWN BY:	CJV
DWG SCALE:	1"=30'
CHECKED BY:	TJT
PROJECT NO:	322-045
APPROVED BY:	DRAFT

TOPOGRAPHIC SURVEY

ECHO REALTY COMPANY
SMITH VALLEY & MORGANTOWN ROAD
GREENWOOD, INDIANA

Civil & Environmental Consultants, Inc.
530 E. Ohio Street · Suite G · Indianapolis, IN 46204
317-655-7777 · 877-746-0749
www.ceiinc.com

REVISION RECORD

NO	DATE	DESCRIPTION

P:\320-000\322-045\-Survey\Dwg\SY01 ALTA TOPO\322045-SY01-ALTA-TOPO.dwg\TOPO-2\ LS:(8/9/2022 - ttrompeter) - LP: 8/9/2022 2:42 PM

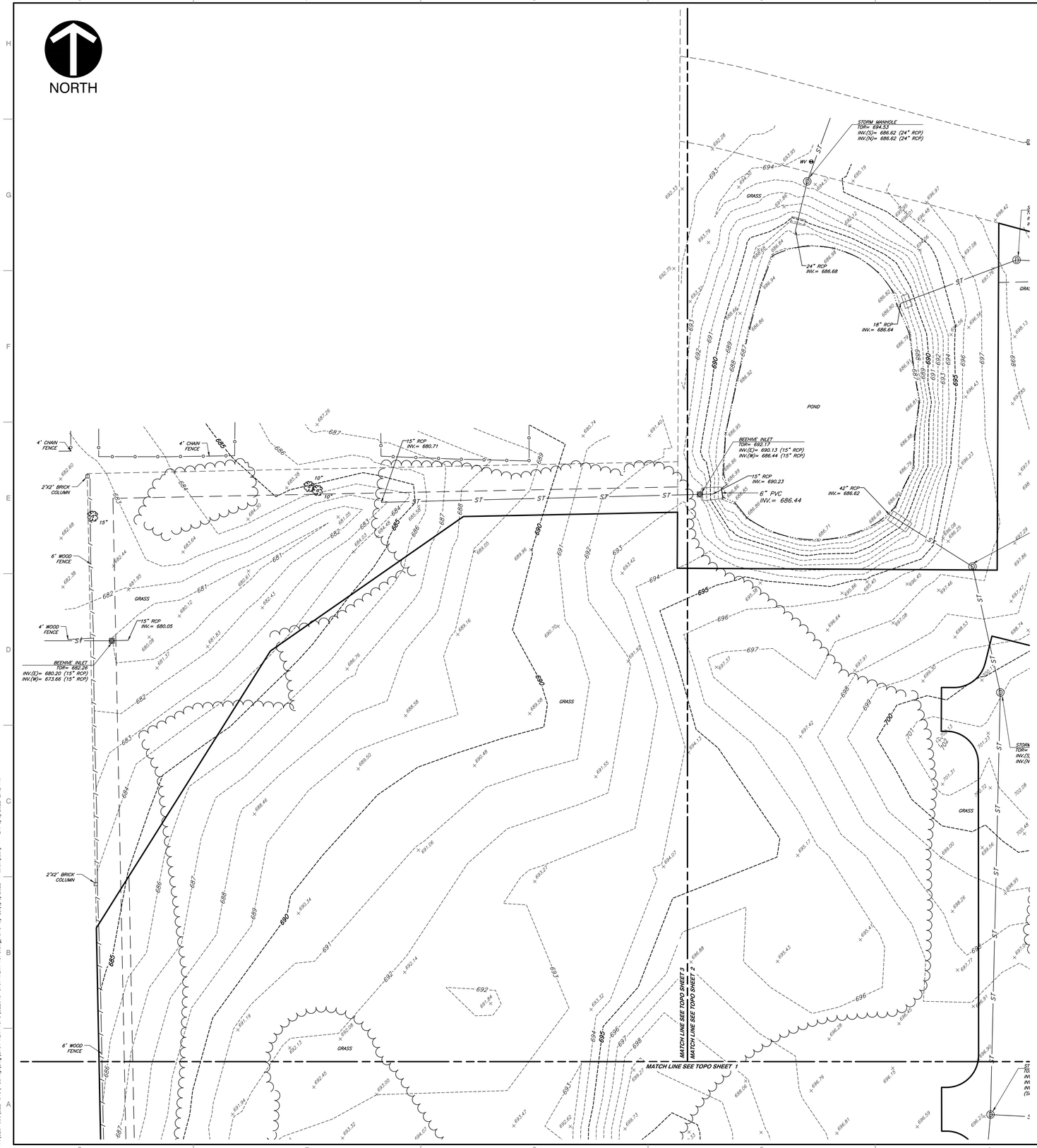

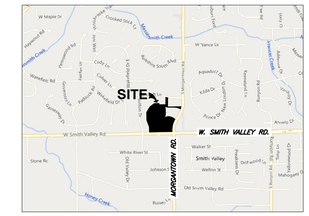

VICINITY MAP
NOT TO SCALE

BENCHMARKS:

UNLESS OTHERWISE NOTED, ELEVATIONS SHOWN HEREON ARE BASED UPON AN OPUS SOLUTION AND ARE ON THE 1988 NORTH AMERICAN VERTICAL DATUM (NAVD88). IT IS MY OPINION THAT THE UNCERTAINTY IN THE ELEVATION OF THE PROJECT BENCHMARK DOES NOT EXCEED 0.10 FOOT.

TBM#1: CUT SQUARE ON THE WEST SIDE OF A CONCRETE LID OF A FORCE MAIN MANHOLE ON THE EAST SIDE OF MORGANTOWN ROAD ACROSS FROM THE NORTHERN MOST CURB CUT ENTRANCE TO THE SITE.
ELEV. = 706.84

TBM#2: CUT "X" ON THE ARROW BOLT OF A HYDRANT LOCATED IN THE NORTHWEST QUADRANT OF THE INTERSECTION OF MORGANTOWN AND SMITH VALLEY ROAD.
ELEV. = 695.82

TBM#3: CUT "X" ON THE ARROW BOLT OF A HYDRANT LOCATED IN THE SOUTHWEST CORNER OF THE SITE.
ELEV. = 699.89

UTILITY NOTE:

THE UNDERGROUND UTILITIES SHOWN HAVE BEEN LOCATED FROM FIELD SURVEY INFORMATION AND EXISTING DRAWINGS. THE SURVEYOR MAKES NO GUARANTEES THAT THE UNDERGROUND UTILITIES COMPRISE ALL SUCH UTILITIES IN THE AREA, EITHER IN-SERVICE OR ABANDONED. THE SURVEYOR FURTHER DOES NOT WARRANT THAT THE UNDERGROUND UTILITIES SHOWN ARE IN THE EXACT LOCATION INDICATED ALTHOUGH THE SURVEYOR DOES CERTIFY THAT THEY ARE LOCATED AS ACCURATELY AS POSSIBLE FROM INFORMATION AVAILABLE. THE SURVEYOR HAS NOT PHYSICALLY LOCATED THE UNDERGROUND UTILITIES. INDIANA 811 ONE-CALL PUBLIC UTILITY LOCATE SERVICE TICKET NUMBERS 2204292249, 2204292299, AND 2204292346 WERE ISSUED FOR THIS SITE.

PRIOR TO ANY EXCAVATION FOR UNDERGROUND UTILITIES, THE CONTRACTOR SHALL EXPOSE AND VERIFY LOCATIONS (HORIZONTAL AND VERTICAL) OF ALL EXISTING UTILITIES INCLUDING BUT NOT LIMITED TO GAS, WATER, AND SANITARY SEWER. ANY CONFLICTS SHALL BE REPORTED IMMEDIATELY TO THE ENGINEER AND THE APPROPRIATE AUTHORITIES.

LEGEND:

	EXISTING PROPERTY LINE
	EXISTING ADJACENT PROPERTY LINE
870	EXISTING INDEX CONTOUR
871	EXISTING INTERMEDIATE CONTOUR
	EXISTING CHAINLINK FENCE LINE
	EXISTING IRON FENCE LINE
	EXISTING FENCE LINE
	EXISTING GAURDRAIL
W	EXISTING WATER LINE
T	EXISTING UNDERGROUND TELEPHONE
FO	EXISTING FIBER OPTIC LINE
UG-E	EXISTING UNDERGROUND ELECTRIC
OH-W	EXISTING OVERHEAD LINES
SAN	EXISTING SANITARY SEWER LINE
CS	EXISTING COMBO SEWER LINE
ST	EXISTING STORM SEWER LINE
G	EXISTING GAS LINE
	EXISTING TREE LINE
	ELEC. LIGHT POLE, PULL BOX, POWER POLE, UTILITY POLE, GUY WIRE, ELEC. TRANSFORMER
	GAS VALVE, GAS METER, GAS LINE MARKER
	WATER MANHOLE, IRRIGATION CONTROL BOX, WATER TAP, WATER METER, FIRE HYDRANT, PIV VALVE, FIRE DEPT. CONNECTION, WATER VALVE
	ELECTRIC MANHOLE, TELEPHONE PEDESTAL, CABLE PEDESTAL, FIBER OPTIC PULL BOX
	BEEHIVE INLET, CURB INLET, RECESSED CURB INLET, DOWNSPOUT, SQUARE STORM INLET, CIRCULAR STORM INLET, DRAINAGE MANHOLE
	UNKNOWN MANHOLE, CLEANOUT, SANITARY MANHOLE, COMBINATION MANHOLE
	MAIL BOX, SIGN, AIR COND., ADA SYMBOL, BOLLARD
	PARKING METER, TRAFFIC POLE, TRAFFIC MANHOLE, PARKING SPACE COUNT
	DECIDUOUS TREE, CONIFEROUS TREE, BUSH
× 1082.40	EXISTING SPOT ELEVATION

SCALE IN FEET
0 30' 60'

Indiana 811
Know what's below. Call before you dig.

REVISION RECORD

NO	DATE	DESCRIPTION

CEC
Civil & Environmental Consultants, Inc.
530 E. Ohio Street · Suite G · Indianapolis, IN 46204
317-655-7777 · 877-746-0749
www.cecinc.com

ECHO REALTY COMPANY
SMITH VALLEY & MORGANTOWN ROAD
GREENWOOD, INDIANA

TOPOGRAPHIC SURVEY

DATE:	JUNE 2, 2022	DRAWN BY:	CJV
DWG SCALE:	1"=30'	CHECKED BY:	TJT
PROJECT NO:			322-045
APPROVED BY:			DRAFT

DRAWING NO.: TOPO
SHEET 1 OF 3

P:\320-000\322-045\-Survey\Dwg\SV01 ALTA TOPO\322045-SV01-ALTA-TOPO.dwg\TOPO-3\ LS:(8/9/2022 - ttrompeter) - LP: 8/9/2022 2:42 PM

BENCHMARKS:

UNLESS OTHERWISE NOTED, ELEVATIONS SHOWN HEREON ARE BASED UPON AN OPUS SOLUTION AND ARE ON THE 1988 NORTH AMERICAN VERTICAL DATUM (NAVD88). IT IS MY OPINION THAT THE UNCERTAINTY IN THE ELEVATION OF THE PROJECT BENCHMARK DOES NOT EXCEED 0.10 FOOT.

TBM#1: CUT SQUARE ON THE WEST SIDE OF A CONCRETE LID OF A FORCE MAIN MANHOLE ON THE EAST SIDE OF MORGANTOWN ROAD ACROSS FROM THE NORTHERN MOST CURB CUT ENTRANCE TO THE SITE.
ELEV. = 706.84

TBM#2: CUT "X" ON THE ARROW BOLT OF A HYDRANT LOCATED IN THE NORTHWEST QUADRANT OF THE INTERSECTION OF MORGANTOWN AND SMITH VALLEY ROAD.
ELEV. = 695.82

TBM#3: CUT "X" ON THE ARROW BOLT OF A HYDRANT LOCATED IN THE SOUTHWEST CORNER OF THE SITE.
ELEV. = 699.89

UTILITY NOTE:

THE UNDERGROUND UTILITIES SHOWN HAVE BEEN LOCATED FROM FIELD SURVEY INFORMATION AND EXISTING DRAWINGS. THE SURVEYOR MAKES NO GUARANTEES THAT THE UNDERGROUND UTILITIES COMPRISE ALL SUCH UTILITIES IN THE AREA, EITHER IN-SERVICE OR ABANDONED. THE SURVEYOR FURTHER DOES NOT WARRANT THAT THE UNDERGROUND UTILITIES SHOWN ARE IN THE EXACT LOCATION INDICATED ALTHOUGH THE SURVEYOR DOES CERTIFY THAT THEY ARE LOCATED AS ACCURATELY AS POSSIBLE FROM INFORMATION AVAILABLE. THE SURVEYOR HAS NOT PHYSICALLY LOCATED THE UNDERGROUND UTILITIES. INDIANA 811 ONE-CALL PUBLIC UTILITY LOCATE SERVICE TICKET NUMBERS 2204292249, 2204292299, AND 2204292346 WERE ISSUED FOR THIS SITE.

PRIOR TO ANY EXCAVATION FOR UNDERGROUND UTILITIES, THE CONTRACTOR SHALL EXPOSE AND VERIFY LOCATIONS (HORIZONTAL AND VERTICAL) OF ALL EXISTING UTILITIES INCLUDING BUT NOT LIMITED TO GAS, WATER, AND SANITARY SEWER. ANY CONFLICTS SHALL BE REPORTED IMMEDIATELY TO THE ENGINEER AND THE APPROPRIATE AUTHORITIES.

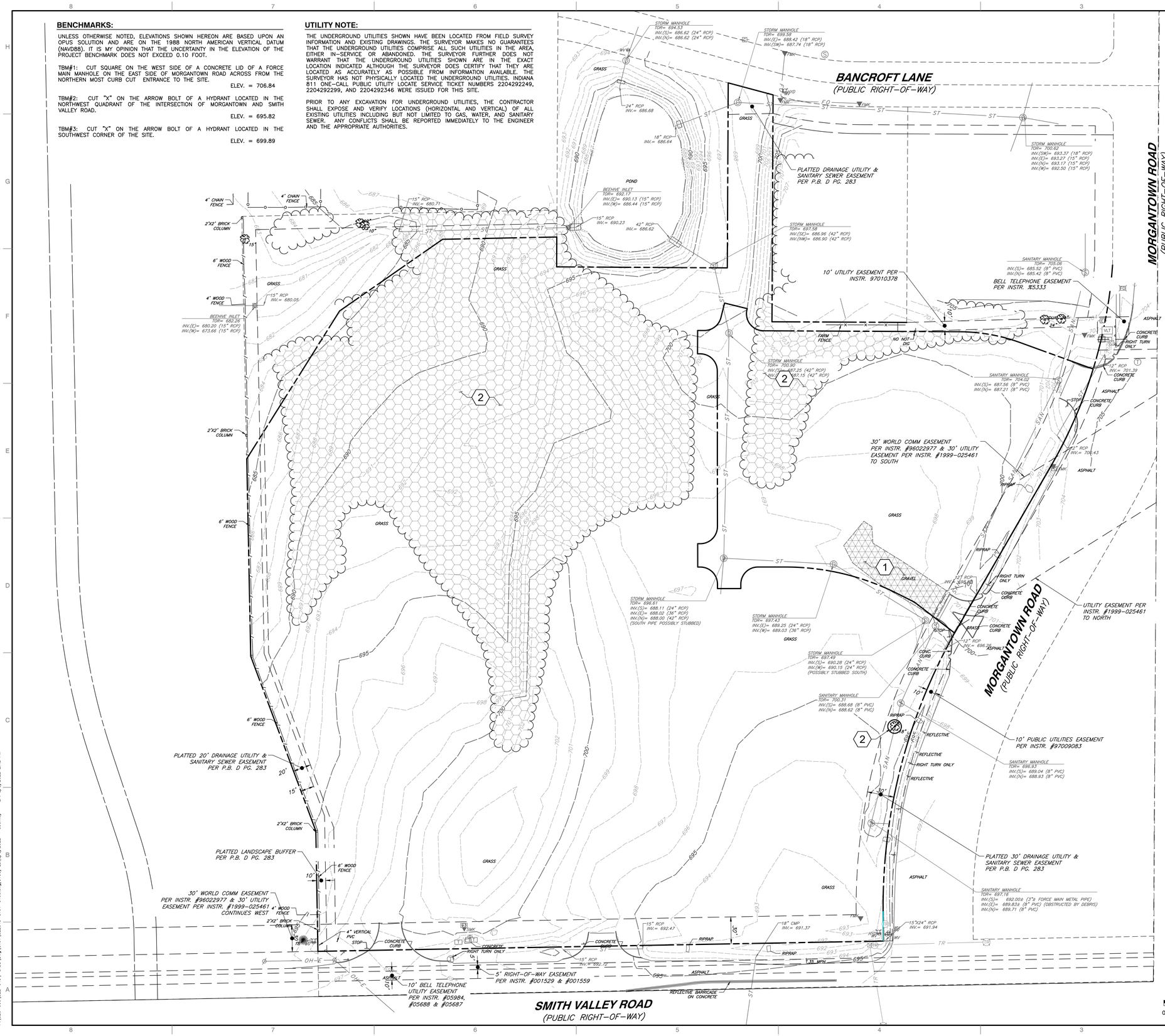

GENERAL DEMOLITION NOTES:

1. THE CONTRACTOR SHALL BE RESPONSIBLE FOR REMOVAL AND DISPOSAL OFF-SITE OF ALL ITEMS SHOWN ON THE DEMOLITION PLAN INCLUDING ITEMS ENCOUNTERED DURING EXCAVATION OF BUILDING FOUNDATIONS AND UTILITY PLACEMENT.
2. PRIOR TO STARTING DEMOLITION, IT IS THE RESPONSIBILITY OF THE CONTRACTOR TO OBTAIN ALL PERMITS REQUIRED BY LOCAL GOVERNMENTAL AGENCIES.
3. THE CONTRACTOR SHALL COORDINATE WITH THE LOCAL UTILITY COMPANIES FOR THE DISCONNECTION AND REMOVAL OF SERVICES TO EXISTING STRUCTURES.
4. ITEMS SHOWN ON THE DEMOLITION PLAN TO BE SALVAGED SHALL BE TRANSPORTED TO LOCATION SPECIFIED BY THE OWNER OR HIS/HER REPRESENTATIVE.
5. ITEMS OF SALVAGEABLE VALUE TO THE CONTRACTOR MAY BE REMOVED WITH THE OWNER OR HIS/HER REPRESENTATIVE'S PERMISSION. THE CONTRACTOR SHALL NOT STORE THESE ITEMS ON SITE.
6. THE CONTRACTOR MAY NOT USE EXPLOSIVES OR BURN DEBRIS.
7. CONDUCT DEMOLITION OPERATIONS TO ENSURE MINIMAL INTERFERENCE WITH ROADS, SIDEWALKS AND ANY OTHER ADJACENT OCCUPIED FACILITIES.
8. DO NOT CLOSE OR OBSTRUCT ROADS, SIDEWALKS OR ANY OTHER OCCUPIED FACILITIES WITHOUT PERMISSION FROM THE LOCAL AUTHORITY HAVING JURISDICTION AND/ OR PROPERTY OWNERS.
9. THE CONTRACTOR SHALL ENSURE SAFE PASSAGE OF PERSON TRAVERSING THROUGH OR AROUND THE CONSTRUCTION SITE.
10. THE CONTRACTOR SHALL PROTECT FROM DAMAGE, SURROUNDING STRUCTURES, UTILITIES AND OTHER FACILITIES DURING DEMOLITION AND REMOVAL OPERATIONS.
11. BUILDING STRUCTURES INCLUDING FOUNDATIONS OR BASEMENTS SHALL BE REMOVED AND BACKFILLED WITH APPROVED BACKFILL MATERIAL. BACKFILL MATERIAL SHALL BE PLACED IN MAXIMUM EIGHT INCH LIFTS AND COMPACTED IN ACCORDANCE WITH THE GEOTECHNICAL REPORT OR A MINIMUM OF 95% OF A STANDARD PROCTOR.
12. UTILITIES SHALL BE REMOVED AND BACKFILLED WITH APPROVED BACKFILL MATERIAL. BACKFILL MATERIAL SHALL BE PLACED IN MAXIMUM EIGHT INCH LIFTS AND COMPACTED IN ACCORDANCE WITH THE GEOTECHNICAL REPORT OR A MINIMUM OF 95% OF A STANDARD PROCTOR.
13. THE CONTRACTOR SHALL BE RESPONSIBLE FOR ENSURING THE CONSTRUCTION SITE AND SURROUNDING AREAS ARE FREE OF ACCUMULATED DEBRIS.

LEGEND:

- EXISTING PROPERTY LINE
- EXISTING ADJACENT PROPERTY LINE
- 870 — EXISTING INDEX CONTOUR
- 871 — EXISTING INTERMEDIATE CONTOUR
- EXISTING CHAINLINK FENCE LINE
- EXISTING IRON FENCE LINE
- EXISTING FENCE LINE
- EXISTING GAURDRAIL
- W — EXISTING WATER LINE
- T — EXISTING UNDERGROUND TELEPHONE
- FO — EXISTING FIBER OPTIC LINE
- UG-E — EXISTING UNDERGROUND ELECTRIC
- OH-W — EXISTING OVERHEAD LINES
- SAN — EXISTING SANITARY SEWER LINE
- CS — EXISTING COMBO SEWER LINE
- ST — EXISTING STORM SEWER LINE
- G — EXISTING GAS LINE
- EXISTING TREE LINE
- ELEC. LIGHT POLE, PULL BOX, POWER POLE, UTILITY POLE, GUY WIRE, ELEC. TRANSFORMER
- GAS VALVE, GAS METER, GAS LINE MARKER
- WATER MANHOLE, IRRIGATION CONTROL BOX, WATER TAP, WATER METER, FIRE HYDRANT, PIV VALVE, FIRE DEPT. CONNECTION, WATER VALVE
- ELECTRIC MANHOLE, TELEPHONE PEDESTAL, CABLE PEDESTAL, FIBER OPTIC PULL BOX
- BEEHIVE INLET, CURB INLET, RECESSED CURB INLET, DOWNSPOUT,SQUARE STORM INLET, CIRCULAR STORM INLET, DRAINAGE MANHOLE
- UNKNOWN MANHOLE, CLEANOUT, SANITARY MANHOLE, COMBINATION MANHOLE
- MAIL BOX, SIGN, AIR COND., ADA SYMBOL, BOLLARD
- PARKING METER, TRAFFIC POLE, TRAFFIC MANHOLE, PARKING SPACE COUNT
- DECIDUOUS TREE, CONIFEROUS TREE, BUSH
- × 700.00 — EXISTING SPOT ELEVATION

DEMOLITION LEGEND:

- GRAVEL TO BE REMOVED
- TREES TO BE REMOVED
- MISC. ITEM TO BE REMOVED

DEMOLITION ITEMS:

1. REMOVE EXISTING GRAVEL COMPLETE; DISPOSE OF OFF SITE.
2. REMOVE EXISTING TREE(S) COMPLETE; DISPOSE OF OFF SITE.

PRELIMINARY
NOT FOR CONSTRUCTION

Indiana 811 — Know what's below. Call before you dig.

NICHOLAS P. JUNKER — REGISTERED — No. PE11800753 — STATE OF INDIANA — PROFESSIONAL ENGINEER
08/09/2022

SUBMITTAL & REVISION RECORD

NO	DATE	DESCRIPTION

Civil & Environmental Consultants, Inc.
530 E. Ohio Street · Suite G · Indianapolis, IN 46204
317-655-7777 · 877-746-0749
www.ceinc.com

ECHO GREENWOOD, LLC
SMITH VALLEY ROAD RETAIL
SMITH VALLEY & MORGANTOWN ROAD
GREENWOOD, IN

EXISTING CONDITIONS & DEMOLITION PLAN

DATE:	AUGUST 9, 2022
DRAWN BY:	JAR
DWG SCALE:	1" = 50'
CHECKED BY:	DRAFT
PROJECT NO:	322-045
APPROVED BY:	DRAFT

DRAWING NO.: **C100**

P:\320-000\322-045\-CADD\Dwg\CV01\322045-CV01-C100.dwg[C100] LS:(8/9/2022 - kbennig) - LP: 8/9/2022 2:42 PM

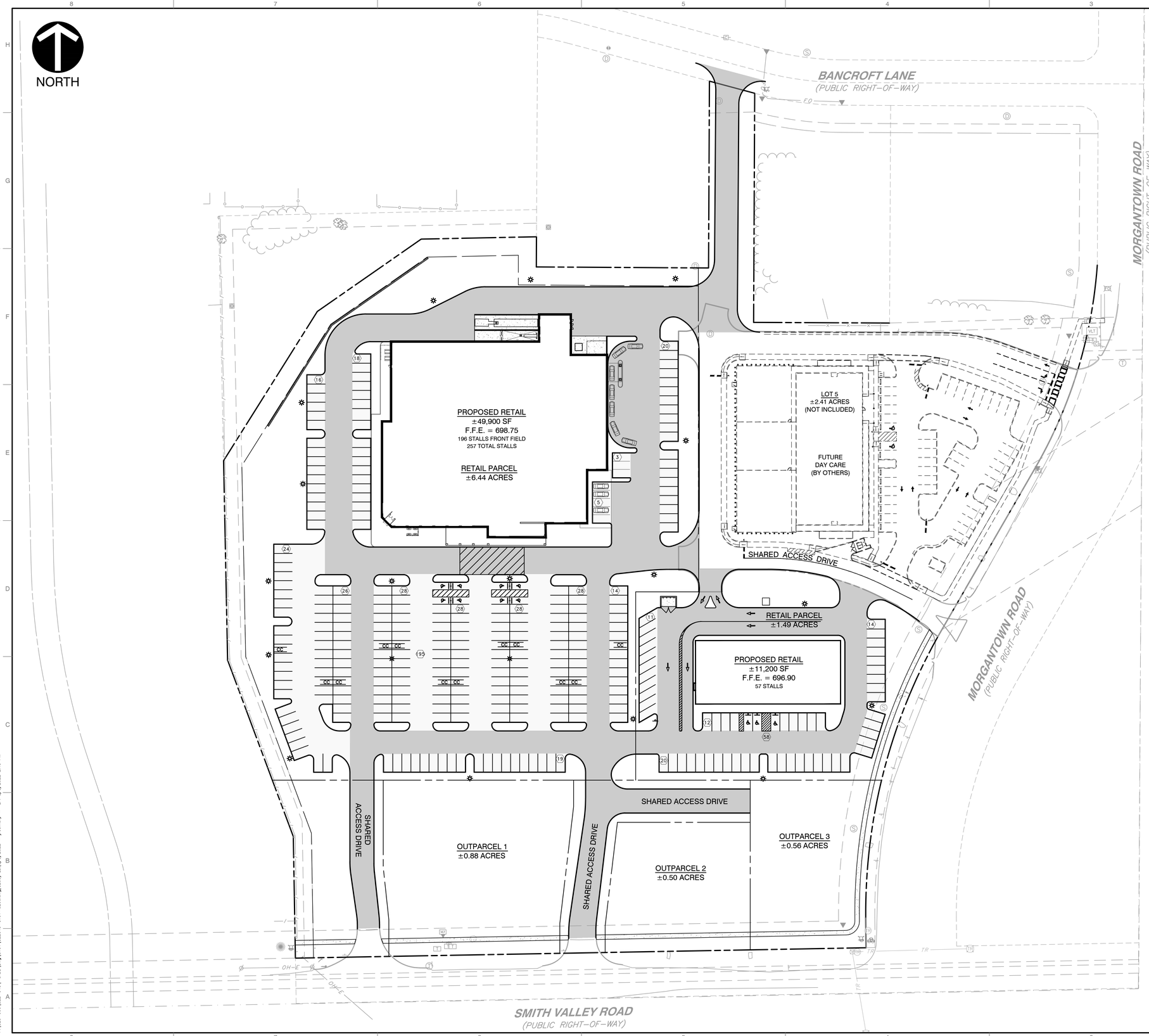

GENERAL LAYOUT NOTES:

1. THE CONTRACTOR SHALL CHECK EXISTING GRADES, DIMENSIONS, AND INVERTS IN THE FIELD AND REPORT ANY DISCREPANCIES TO THE OWNER'S REPRESENTATIVE PRIOR TO BEGINNING WORK.
2. THE CONTRACTOR SHALL VERIFY THE EXACT LOCATION OF ALL EXISTING UTILITIES, INCLUDING IRRIGATION LINES. TAKE CARE TO PROTECT UTILITIES THAT ARE TO REMAIN. RELOCATE EXISTING UTILITIES AS INDICATED, OR AS NECESSARY FOR CONSTRUCTION.
3. PROVIDE A SMOOTH TRANSITION BETWEEN EXISTING PAVEMENT AND NEW PAVEMENT. FIELD ADJUSTMENT OF FINAL GRADES MAY BE NECESSARY. INSTALL ALL UTILITIES, INCLUDING IRRIGATION SLEEVING, PRIOR TO INSTALLATION OF PAVED SURFACES.
4. SITE WORK CONCRETE WALKS AND PADS SHALL HAVE A BROOM FINISH TO ALL SURFACES. SITE WORK CONCRETE SHALL BE CLASS A (4,000 PSI @ 28 DAYS) UNLESS OTHERWISE NOTED.
5. ALL DAMAGE TO EXISTING PAVEMENT TO REMAIN WHICH RESULTS FROM THE CONTRACTOR'S OPERATIONS SHALL BE REPLACED WITH LIKE MATERIALS AT THE CONTRACTOR'S EXPENSE.
6. SITE DIMENSIONS SHOWN ARE TO THE FACE OF CURB, OR EDGE OF PAVEMENT UNLESS OTHERWISE NOTED.
7. CONTRACTOR SHALL MAINTAIN ONE SET OF AS-BUILT / RECORD DRAWINGS ON THE JOB SITE DURING CONSTRUCTION FOR DISTRIBUTION TO THE OWNER AND/OR OWNER'S REPRESENTATIVE UPON COMPLETION.
8. REFER TO THE ARCHITECTURAL DRAWINGS FOR EXACT DIMENSIONS AND LOCATIONS OF UTILITY SERVICE ENTRY LOCATIONS AND PRECISE BUILDING DIMENSIONS.
9. THIS SITE LAYOUT IS SPECIFIC TO THE APPROVALS NECESSARY FOR THE CONSTRUCTION IN ACCORDANCE WITH THE CITY OF GREENWOOD. NO CHANGES TO THE SITE LAYOUT ARE ALLOWED WITHOUT THE WRITTEN APPROVAL OF THE OWNER. CHANGES MADE TO THE SITE LAYOUT WITHOUT APPROVAL IS SOLELY THE RESPONSIBILITY OF THE CONTRACTOR. CHANGES INCLUDE BUT ARE NOT LIMITED TO, INCREASED IMPERVIOUS PAVEMENT, ADDITION / DELETION OF PARKING SPACES, MOVEMENT OF CURB LINES, CHANGES TO DRAINAGE STRUCTURES AND PATTERNS, LANDSCAPING, ETC.
10. EXISTING CONDITIONS AS DEPICTED ON THESE PLANS ARE GENERAL AND ILLUSTRATIVE IN NATURE. IT IS THE RESPONSIBILITY OF THE CONTRACTOR TO EXAMINE THE SITE AND BE FAMILIAR WITH EXISTING CONDITIONS PRIOR TO BIDDING ON THIS PROJECT. IF CONDITIONS ENCOUNTERED DURING EXAMINATION ARE SIGNIFICANTLY DIFFERENT THAN THOSE SHOWN, THE CONTRACTOR SHALL NOTIFY THE ENGINEER IMMEDIATELY.
11. THE CONTRACTOR AND SUBCONTRACTORS SHALL BE RESPONSIBLE FOR COMPLYING WITH APPLICABLE FEDERAL, STATE AND LOCAL REQUIREMENTS, TOGETHER WITH EXERCISING PRECAUTIONS AT ALL TIMES FOR THE PROTECTION OF PERSONS (INCLUDING EMPLOYEES) AND PROPERTY. IT IS THE SOLE RESPONSIBILITY OF THE CONTRACTOR AND SUBCONTRACTORS TO INITIATE, MAINTAIN AND SUPERVISE ALL SAFETY REQUIREMENTS, PRECAUTIONS AND PROGRAMS IN CONNECTION WITH THE WORK.
12. THE CONTRACTOR SHALL INDEMNIFY AND HOLD HARMLESS THE OWNER AND OWNER'S REPRESENTATIVE FOR ANY AND ALL INJURIES AND/OR DAMAGES TO PERSONNEL, EQUIPMENT AND/OR EXISTING FACILITIES OCCURRING IN THE COURSE OF THE DEMOLITION AND CONSTRUCTION DESCRIBED IN THE PLANS AND SPECIFICATIONS.
13. THE CONTRACTOR SHALL COMPLY WITH ALL LOCAL CODES, OBTAIN ALL APPLICABLE PERMITS, AND PAY ALL REQUIRED FEES PRIOR TO BEGINNING WORK.
14. ALL WORK PERFORMED BY THE CONTRACTOR SHALL CONFORM TO THE LATEST REGULATIONS OF THE AMERICANS WITH DISABILITIES ACT.
15. CONTRACTOR SHALL REFER TO OTHER PLANS WITHIN THIS CONSTRUCTION SET FOR OTHER PERTINENT INFORMATION. IT IS NOT THE ENGINEER'S INTENT THAT ANY SINGLE PLAN SHEET IN THIS SET OF DOCUMENTS FULLY DEPICT ALL WORK ASSOCIATED WITH THE PROJECT.
16. BEFORE INSTALLATION OF STORM OR SANITARY SEWER, OR OTHER UTILITY, THE CONTRACTOR SHALL VERIFY ALL CROSSINGS, BY EXCAVATION WHERE NECESSARY, AND INFORM THE OWNER AND THE ENGINEER OF ANY CONFLICTS. THE ENGINEER WILL BE HELD HARMLESS IN THE EVENT HE IS NOT NOTIFIED OF DESIGN CONFLICTS PRIOR TO CONSTRUCTION.

UTILITY NOTE:

THE UNDERGROUND UTILITIES SHOWN HAVE BEEN LOCATED FROM FIELD SURVEY INFORMATION AND EXISTING DRAWINGS. THE SURVEYOR MAKES NO GUARANTEES THAT THE UNDERGROUND UTILITIES COMPRISE ALL SUCH UTILITIES IN THE AREA, EITHER IN-SERVICE OR ABANDONED. THE SURVEYOR FURTHER DOES NOT WARRANT THAT THE UNDERGROUND UTILITIES SHOWN ARE IN THE EXACT LOCATION INDICATED ALTHOUGH THE SURVEYOR DOES CERTIFY THAT THEY ARE LOCATED AS ACCURATELY AS POSSIBLE FROM INFORMATION AVAILABLE. THE SURVEYOR HAS NOT PHYSICALLY LOCATED THE UNDERGROUND UTILITIES. INDIANA 811 ONE-CALL PUBLIC UTILITY LOCATE SERVICE TICKET NUMBERS 2204292249, 2204292299, AND 2204292346 WERE ISSUED FOR THIS SITE.

PRIOR TO ANY EXCAVATION FOR UNDERGROUND UTILITIES, THE CONTRACTOR SHALL EXPOSE AND VERIFY LOCATIONS (HORIZONTAL AND VERTICAL) OF ALL EXISTING UTILITIES INCLUDING BUT NOT LIMITED TO GAS, WATER, AND SANITARY SEWER. ANY CONFLICTS SHALL BE REPORTED IMMEDIATELY TO THE ENGINEER AND THE APPROPRIATE AUTHORITIES.

PROPOSED LEGEND:

- PROPOSED LIGHT DUTY PAVEMENT
- PROPOSED HEAVY DUTY PAVEMENT
- PROPOSED CONCRETE PAVEMENT
- PROPOSED ADA PARKING SYMBOL, PARKING BUMPER, SIGN, DETECTABLE WARNING STRIP
- PROPOSED PARKING COUNT
- PROPOSED LIGHT POLE

SCALE IN FEET
0 50' 100'

PRELIMINARY
NOT FOR CONSTRUCTION

Indiana 811
Know what's below. Call before you dig.

NICHOLAS P. JUSTICE
REGISTERED
No. PE11800757
STATE OF INDIANA
PROFESSIONAL ENGINEER
08/09/2022

SUBMITTAL & REVISION RECORD

NO	DATE	DESCRIPTION

Civil & Environmental Consultants, Inc.
530 E. Ohio Street · Suite G · Indianapolis, IN 46204
317-655-7777 · 877-746-0749
www.cecinc.com

ECHO GREENWOOD, LLC
SMITH VALLEY ROAD RETAIL
SMITH VALLEY & MORGANTOWN ROAD
GREENWOOD, IN

OVERALL SITE PLAN

DATE:	AUGUST 9, 2022
DRAWN BY:	JAR
DWG SCALE:	1" = 50'
CHECKED BY:	DRAFT
PROJECT NO:	322-045
APPROVED BY:	DRAFT

DRAWING NO.:
C200

P:\320-045\322-045\-CADD\Dwg\C101\322045-C101-C200.dwg[C200] LS:(8/9/2022 - jnelmony) - LP: 8/9/2022 2:43 PM

NORTH

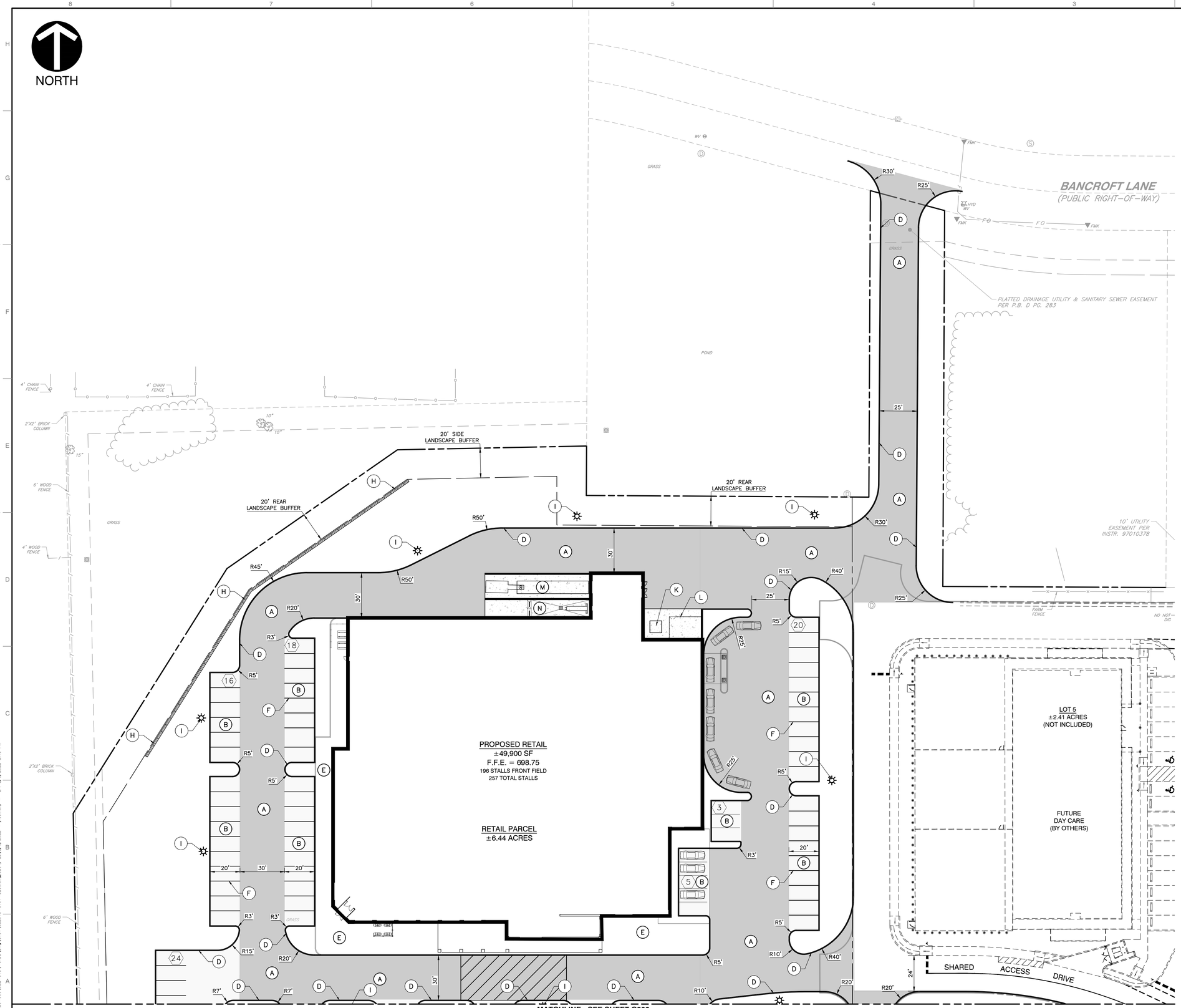

REFERENCE:

1. SEE DRAWING C200 FOR GENERAL NOTES AND SHEET SPECIFIC NOTES.
2. CONTRACTOR SHALL REFER TO OTHER PLANS WITHIN THIS CONSTRUCTION SET FOR OTHER PERTINENT INFORMATION. IT IS NOT THE ENGINEER'S INTENT THAT ANY SINGLE PLAN SHEET IN THIS SET OF DOCUMENTS FULLY DEPICT ALL WORK ASSOCIATED WITH THE PROJECT.

PROPOSED LEGEND:

- PROPOSED LIGHT DUTY PAVEMENT
- PROPOSED HEAVY DUTY PAVEMENT
- PROPOSED CONCRETE PAVEMENT
- PROPOSED ADA PARKING SYMBOL, PARKING BUMPER, SIGN, DETECTABLE WARNING STRIP
- PROPOSED PARKING COUNT
- PROPOSED LIGHT POLE

KEY NOTES

A	HEAVY-DUTY ASPHALT; SEE DETAIL ON SHEET C800.
B	LIGHT-DUTY ASPHALT; SEE DETAIL ON SHEET C800.
C	CONCRETE PAVEMENT; SEE DETAIL ON SHEET C800.
D	6" CONCRETE CURB; SEE DETAIL ON SHEET C800.
E	CONCRETE SIDEWALK; SEE DETAIL ON SHEET C800.
F	4" WIDE PAINTED STRIPE; COLOR-WHITE
G	ADA PARKING SPACE; SEE DETAIL ON SHEET C800.
H	CONCRETE RETAINING WALL; SEE DETAIL ON SHEET C801. CONTRACTOR TO PROVIDE WALL SHOP DRAWINGS TO ENGINEER FOR APPROVAL.
I	LIGHT POLE; SEE DETAIL ON SHEET C801.
J	DUMPSTER ENCLOSURE
K	TRANSFORMER PAD
L	GENERATOR ENCLOSURE
M	TRUCK DOCK
N	COMPACTOR PAD
O	DO NOT ENTER SIGN
P	CART STORAGE

SCALE IN FEET
0 30' 60'

PRELIMINARY
NOT FOR CONSTRUCTION

Indiana 811
Know what's below. Call before you dig.

NICHOLAS P. JUSTICE
REGISTERED
No. PE11800753
STATE OF INDIANA
PROFESSIONAL ENGINEER
08/09/2022

SUBMITTAL & REVISION RECORD

NO	DATE	DESCRIPTION

Civil & Environmental Consultants, Inc.
530 E. Ohio Street · Suite G · Indianapolis, IN 46204
317-655-7777 · 877-746-0749
www.ceiinc.com

ECHO GREENWOOD, LLC
SMITH VALLEY ROAD RETAIL
SMITH VALLEY & MORGANTOWN ROAD
GREENWOOD, IN

SITE PLAN

DATE:	AUGUST 9, 2022
DRAWN BY:	JAR
DWG SCALE:	1" = 30'
CHECKED BY:	DRAFT
PROJECT NO:	322-045
APPROVED BY:	DRAFT

DRAWING NO.: C201

P:\320-005\322-045\-CADD\Dwg\CV01\322045-CV01-C200.dwg(C201) LS:(8/9/2022 - jhedman) - LP: 8/9/2022 2:43 PM

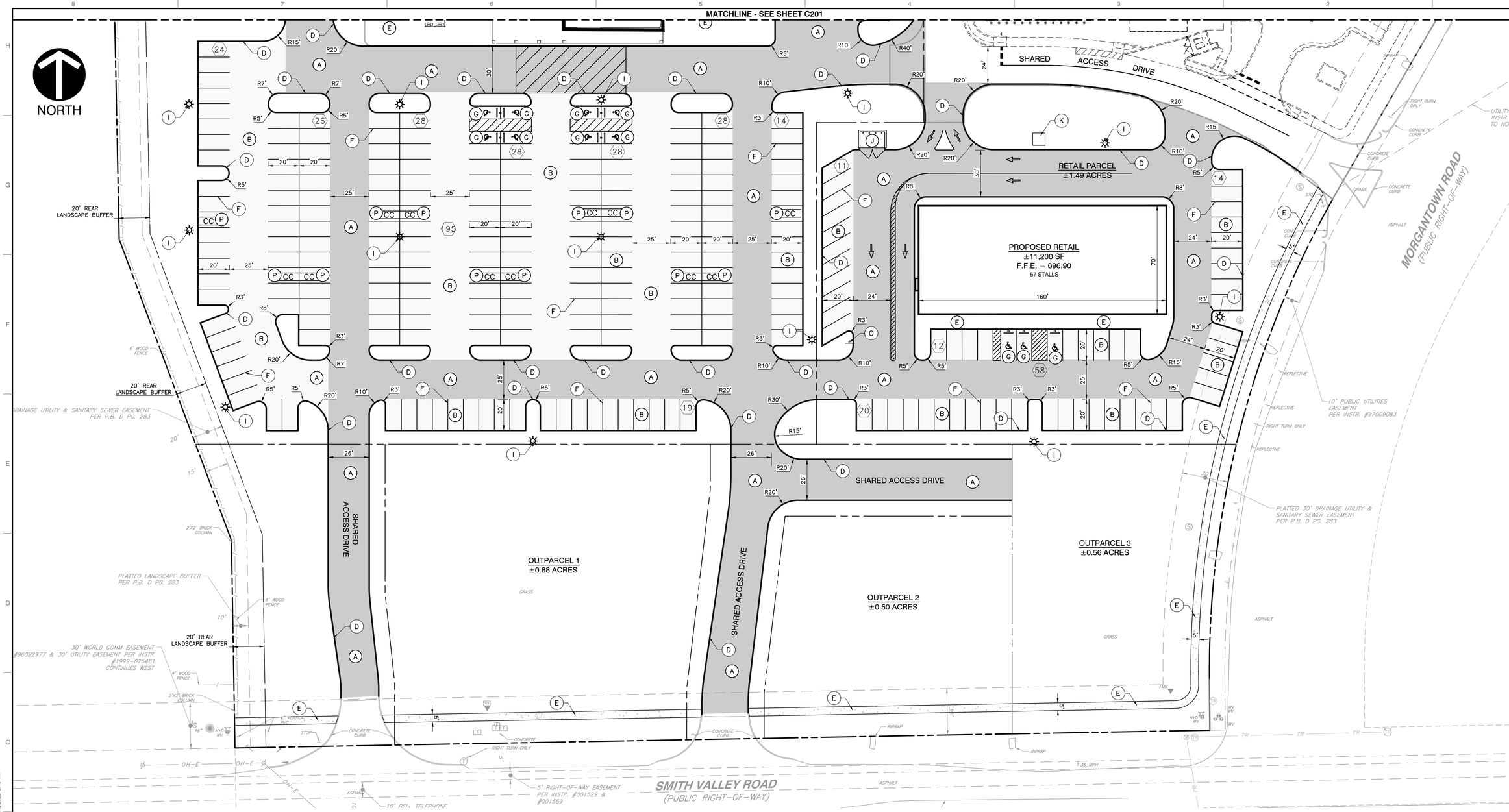

KEY NOTES

A	HEAVY-DUTY ASPHALT; SEE DETAIL ON SHEET C800.
B	LIGHT-DUTY ASPHALT; SEE DETAIL ON SHEET C800.
C	CONCRETE PAVEMENT; SEE DETAIL ON SHEET C800.
D	6" CONCRETE CURB; SEE DETAIL ON SHEET C800.
E	CONCRETE SIDEWALK; SEE DETAIL ON SHEET C800.
F	4" WIDE PAINTED STRIPE; COLOR-WHITE
G	ADA PARKING SPACE; SEE DETAIL ON SHEET C800.
H	CONCRETE RETAINING WALL; SEE DETAIL ON SHEET C801. CONTRACTOR TO PROVIDE WALL SHOP DRAWINGS TO ENGINEER FOR APPROVAL.
I	LIGHT POLE; SEE DETAIL ON SHEET C801.
J	DUMPSTER ENCLOSURE
K	TRANSFORMER PAD
L	GENERATOR ENCLOSURE
M	TRUCK DOCK
N	COMPACTOR PAD
O	DO NOT ENTER SIGN
P	CART STORAGE

PROPOSED LEGEND:

- PROPOSED LIGHT DUTY PAVEMENT
- PROPOSED HEAVY DUTY PAVEMENT
- PROPOSED CONCRETE PAVEMENT
- PROPOSED ADA PARKING SYMBOL, PARKING BUMPER, SIGN, DETECTABLE WARNING STRIP
- 00 PROPOSED PARKING COUNT
- PROPOSED LIGHT POLE

REFERENCE:

1. SEE DRAWING C200 FOR GENERAL NOTES AND SHEET SPECIFIC NOTES.
2. CONTRACTOR SHALL REFER TO OTHER PLANS WITHIN THIS CONSTRUCTION SET FOR OTHER PERTINENT INFORMATION. IT IS NOT THE ENGINEER'S INTENT THAT ANY SINGLE PLAN SHEET IN THIS SET OF DOCUMENTS FULLY DEPICT ALL WORK ASSOCIATED WITH THE PROJECT.

SCALE IN FEET
0 30' 60'

PRELIMINARY
NOT FOR CONSTRUCTION

Indiana 811
Know what's below. Call before you dig.

NICHOLAS P. JUNKER REGISTERED No. PE11800753 STATE OF INDIANA PROFESSIONAL ENGINEER
08/09/2022

SUBMITTAL & REVISION RECORD

NO	DATE	DESCRIPTION

Civil & Environmental Consultants, Inc.
530 E. Ohio Street · Suite G · Indianapolis, IN 46204
317-655-7777 · 877-746-0749
www.ceiinc.com

ECHO GREENWOOD, LLC
SMITH VALLEY ROAD RETAIL
SMITH VALLEY & MORGANTOWN ROAD
GREENWOOD, IN

SITE PLAN

DATE:	AUGUST 9, 2022
DRAWN BY:	JAR
DWG SCALE:	1" = 30'
CHECKED BY:	DRAFT
PROJECT NO:	322-045
APPROVED BY:	DRAFT

DRAWING NO.: C202

P:\320-001\322-045\-CADD\Dwg\CV01\322045-CV01-C200.dwg[C202] LS:(8/9/2022 - jhedman) - LP: 8/9/2022 2:43 PM

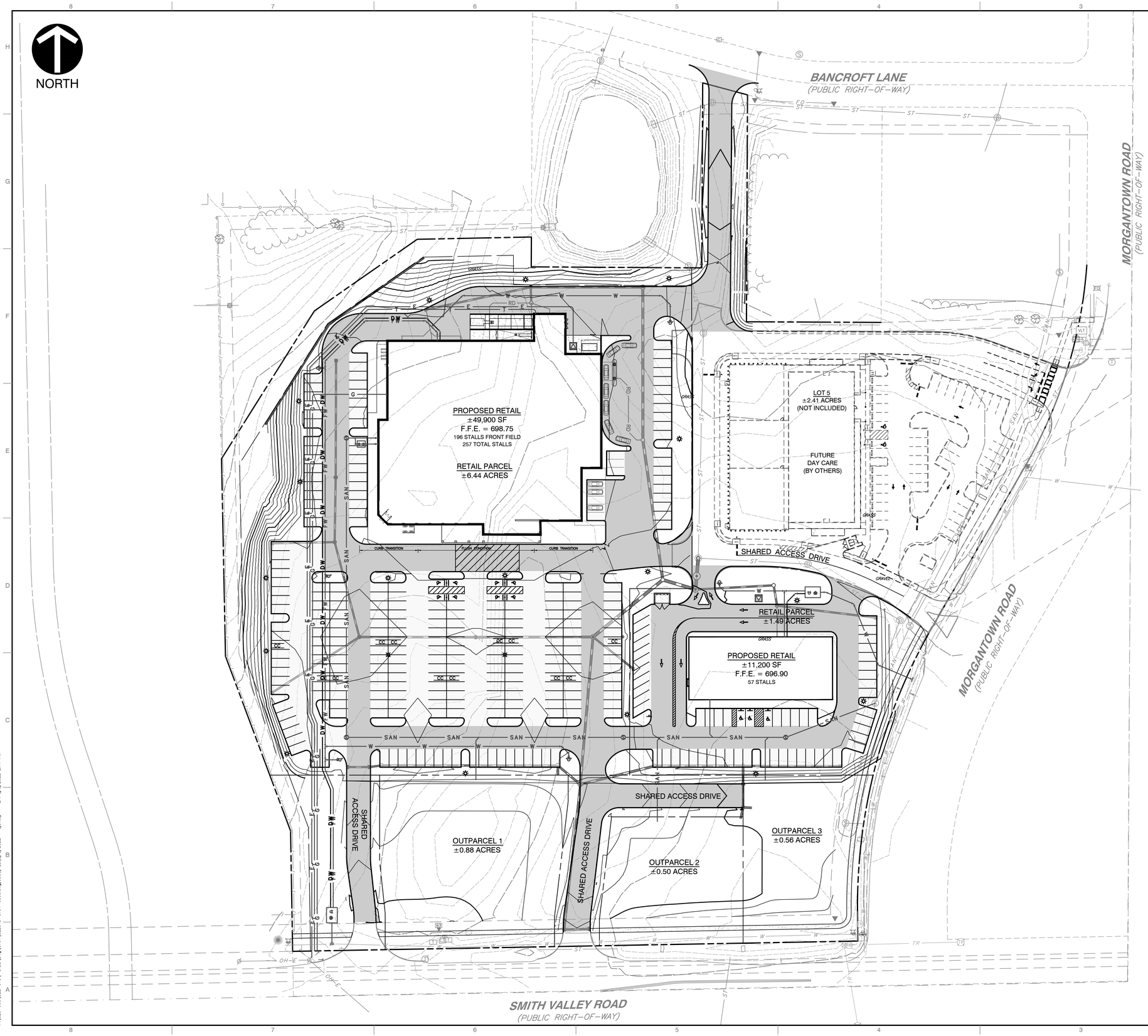

GENERAL GRADING NOTES:

1. CONTRACTOR SHALL STRICTLY ADHERE TO THE EROSION CONTROL MEASURES PREPARED FOR THIS PROJECT.
2. EARTHWORK SHALL INCLUDE CLEARING AND GRUBBING, STRIPPING AND STOCKPILING TOPSOIL, MASS GRADING, EXCAVATION, FILLING, UNDER CUT AND REPLACEMENT, IF REQUIRED, AND COMPACTION.
3. CONTRACTOR TO REFILL UNDERCUT AREAS WITH SUITABLE MATERIAL AND COMPACT AS RECOMMENDED BY THE GEOTECHNICAL ENGINEER.
4. PLACE TOPSOIL OVER THE SUBGRADE OF UNPAVED, DISTURBED AREAS TOA DEPTH INDICATED ON THE LANDSCAPE PLANS (6" MINIMUM). PAVEMENT SLOPES ACROSS ACCESSIBLE PARKING STALLS AND ADJOINING ACCESS AISLES SHALL BE MAXIMUM 2%.
5. ALL SLOPES SHALL BE 3:1 (HORIZONTAL:VERTICAL) MAXIMUM UNLESS NOTED OTHERWISE.
6. ALL AREAS NOT PAVED SHALL BE STABILIZED IN ACCORDANCE WITH THE EROSION CONTROL PLAN, UNLESS NOTED OTHERWISE.
7. ALL EXCESS SOIL MATERIALS SHALL BECOME THE PROPERTY OF THE CONTRACTOR UNLESS OTHERWISE DESIGNATED SHALL BE REMOVED BY THE CONTRACTOR AND DISPOSED OF OFFSITE AT NO ADDITIONAL COST TO THE OWNER IN ACCORDANCE WITH ALL LOCAL AND STATE CODES AND PERMIT REQUIREMENTS.
8. DRAINAGE SYSTEMS SHALL BE INSPECTED DURING CONSTRUCTION BY A REGISTERED PROFESSIONAL ENGINEER OR LAND SURVEYOR. WITHIN 30 DAYS AFTER COMPLETION OF ON AND OFF-SITE DRAINAGE FACILITIES, THE REGISTERED PROFESSIONAL SHALL CERTIFY IN WRITING THE COMPLIANCE OF THE DRAINAGE FACILITIES PER LOCAL REQUIREMENTS.
9. CONTRACTOR SHALL PERPETUATE ALL DRAINS AND TILES ENCOUNTERED DURING CONSTRUCTION. COORDINATE WITH ENGINEER OF RECORD REGARDING THE CONNECTION TO THE PROPOSED STORM SEWER SYSTEM.
10. STORM STRUCTURES RECEIVING SUB-SURFACE DRAINS (SSD) SHALL HAVE BOTH CONNECTIONS CORE DRILLED. T OR Y BLIND CONNECTIONS ARE NOT ALLOWED.
11. REFER TO AND FOLLOW THE RECOMMENDATIONS OF THE GEOTECHNICAL REPORT PREPARED FOR THIS PROJECT.

UTILITY NOTE:

THE UNDERGROUND UTILITIES SHOWN HAVE BEEN LOCATED FROM FIELD SURVEY INFORMATION AND EXISTING DRAWINGS. THE SURVEYOR MAKES NO GUARANTEES THAT THE UNDERGROUND UTILITIES COMPRISE ALL SUCH UTILITIES IN THE AREA, EITHER IN-SERVICE OR ABANDONED. THE SURVEYOR FURTHER DOES NOT WARRANT THAT THE UNDERGROUND UTILITIES SHOWN ARE IN THE EXACT LOCATION INDICATED ALTHOUGH THE SURVEYOR DOES CERTIFY THAT THEY ARE LOCATED AS ACCURATELY AS POSSIBLE FROM INFORMATION AVAILABLE. THE SURVEYOR HAS NOT PHYSICALLY LOCATED THE UNDERGROUND UTILITIES. INDIANA 811 ONE-CALL PUBLIC UTILITY LOCATE SERVICE TICKET NUMBERS 2204292249, 2204292299, AND 2204292346 WERE ISSUED FOR THIS SITE.

PRIOR TO ANY EXCAVATION FOR UNDERGROUND UTILITIES, THE CONTRACTOR SHALL EXPOSE AND VERIFY LOCATIONS (HORIZONTAL AND VERTICAL) OF ALL EXISTING UTILITIES INCLUDING BUT NOT LIMITED TO GAS, WATER, AND SANITARY SEWER. ANY CONFLICTS SHALL BE REPORTED IMMEDIATELY TO THE ENGINEER AND THE APPROPRIATE AUTHORITIES.

GRADING LEGEND:

700	PROPOSED INDEX CONTOUR
699	PROPOSED INTERMEDIATE CONTOUR
	PROPOSED DRAINAGE SWALE
	PROPOSED GRADE BREAK
	PROPOSED STORM SEWER LINE
	PROPOSED UNDERDRAIN
700.00	PROPOSED SPOT ELEVATION
700.50 / 700.00	PROPOSED CURB SPOT ELEVATION; TOP OF CURB ON TOP, GUTTER ELEVATION ON BOTTOM

ABBREVIATIONS:
TC = TOP OF CURB
BC = BOTTOM OF CURB
TW = TOP OF WALL
BW = BOTTOM OF WALL
TR = TOP OF RAMP
BR = BOTTOM OF RAMP
ME = MATCH EXISTING

SCALE IN FEET
0 50' 100'

PRELIMINARY
NOT FOR CONSTRUCTION

Indiana 811
Know what's below. Call before you dig.

NICHOLAS P. JUSTICE
REGISTERED
No. PE11800753
STATE OF INDIANA
PROFESSIONAL ENGINEER
08/09/2022

SUBMITTAL & REVISION RECORD

NO	DATE	DESCRIPTION

Civil & Environmental Consultants, Inc.
530 E. Ohio Street · Suite G · Indianapolis, IN 46204
317-655-7777 · 877-746-0749
www.ceinc.com

ECHO GREENWOOD, LLC
SMITH VALLEY ROAD RETAIL
SMITH VALLEY & MORGANTOWN ROAD
GREENWOOD, IN

OVERALL GRADING PLAN

DATE:	AUGUST 9, 2022
DRAWN BY:	JAR
DWG SCALE:	1" = 50'
CHECKED BY:	DRAFT
PROJECT NO:	322-045
APPROVED BY:	DRAFT

DRAWING NO.: C300

P:\320-000\322-045\-0400\Dwg\CVD\322045-CV01-C300.dwg(C300) LS:(8/9/2022 - gsmay) - LM: 8/9/2022 2:44 PM

NORTH

REFERENCE:

1. SEE DRAWING C300 FOR GENERAL NOTES AND SHEET SPECIFIC NOTES.
2. CONTRACTOR SHALL REFER TO OTHER PLANS WITHIN THIS CONSTRUCTION SET FOR OTHER PERTINENT INFORMATION. IT IS NOT THE ENGINEER'S INTENT THAT ANY SINGLE PLAN SHEET IN THIS SET OF DOCUMENTS FULLY DEPICT ALL WORK ASSOCIATED WITH THE PROJECT.

GRADING LEGEND:

700	PROPOSED INDEX CONTOUR
699	PROPOSED INTERMEDIATE CONTOUR
	PROPOSED DRAINAGE SWALE
	PROPOSED GRADE BREAK
	PROPOSED STORM SEWER LINE
	PROPOSED UNDERDRAIN
700.00	PROPOSED SPOT ELEVATION
700.50 / 700.00	PROPOSED CURB SPOT ELEVATION; TOP OF CURB ON TOP, GUTTER ELEVATION ON BOTTOM

ABBREVIATIONS:
TC = TOP OF CURB
BC = BOTTOM OF CURB
TW = TOP OF WALL
BW = BOTTOM OF WALL
TR = TOP OF RAMP
BR = BOTTOM OF RAMP
ME = MATCH EXISTING

BANCROFT LANE
(PUBLIC RIGHT-OF-WAY)

POND

PROPOSED RETAIL
±49,900 SF
F.F.E. = 698.75
196 STALLS FRONT FIELD
257 TOTAL STALLS

RETAIL PARCEL
±6.44 ACRES

LOT 5
±2.41 ACRES
(NOT INCLUDED)

FUTURE
DAY CARE
(BY OTHERS)

CURB TRANSITION | FLUSH CONDITION | CURB TRANSITION

SHARED ACCESS DRIVE

MATCHLINE - SEE SHEET C302

SCALE IN FEET
0 30' 60'

PRELIMINARY
NOT FOR CONSTRUCTION

Indiana 811
Know what's below. Call before you dig.

NICHOLAS P. JUSTICE
REGISTERED
No. PE11800753
STATE OF INDIANA
PROFESSIONAL ENGINEER
08/09/2022

SUBMITTAL & REVISION RECORD

NO	DATE	DESCRIPTION

CEC
Civil & Environmental Consultants, Inc.
530 E. Ohio Street · Suite G · Indianapolis, IN 46204
317-655-7777 · 877-746-0749
www.cecinc.com

ECHO GREENWOOD, LLC
SMITH VALLEY ROAD RETAIL
SMITH VALLEY & MORGANTOWN ROAD
GREENWOOD, IN

GRADING PLAN

DATE:	AUGUST 9, 2022
DRAWN BY:	JAR
DWG SCALE:	1" = 30'
CHECKED BY:	DRAFT
PROJECT NO:	322-045
APPROVED BY:	DRAFT

DRAWING NO.: C301

P:\320-045\322-045-CAD\Dwg\CVP\322045-CV01-C300.dwg(C301) LS:(8/9/2022 - sjones) - LP: 8/9/2022 2:44 PM

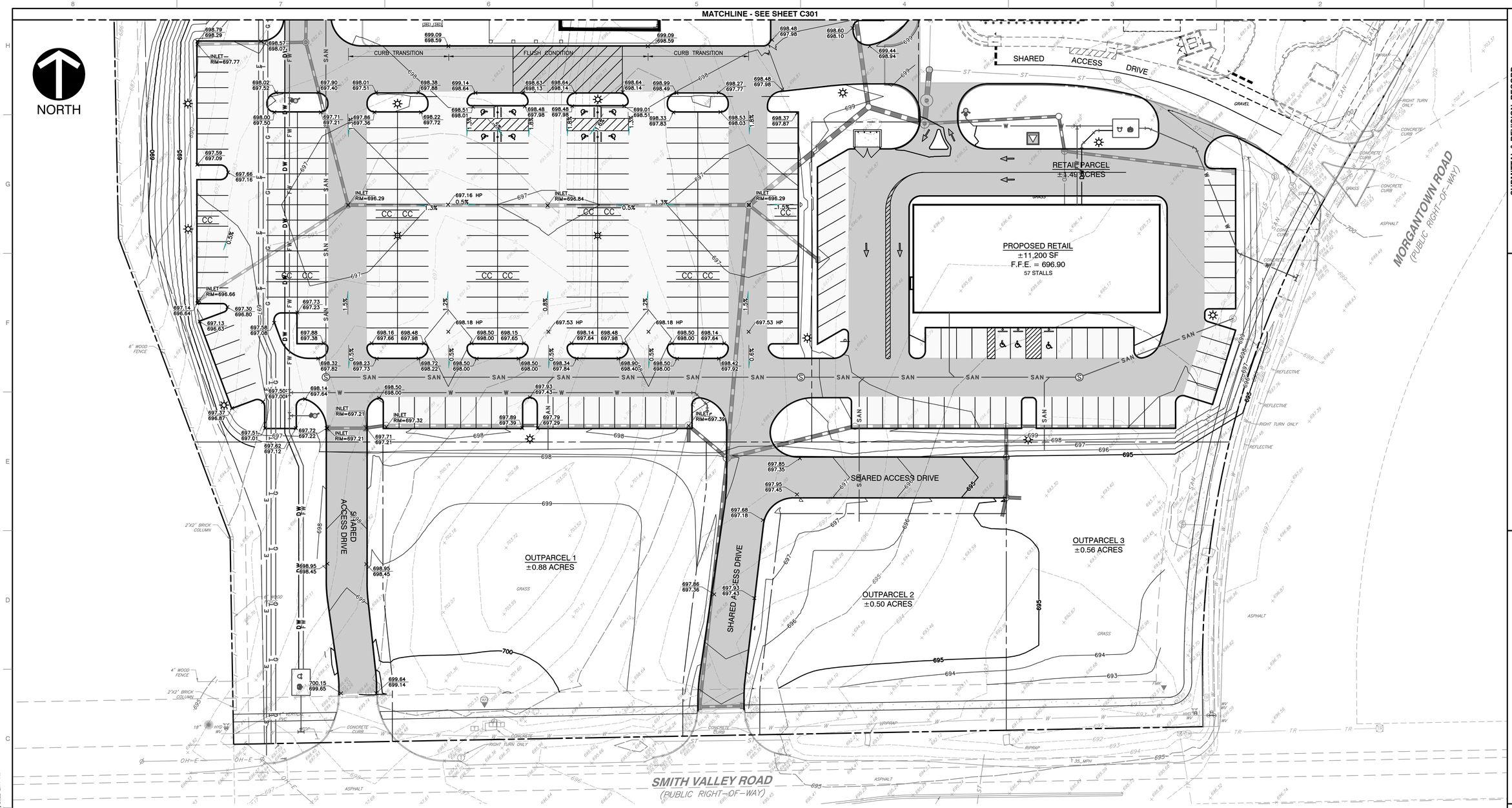

GRADING LEGEND:

700	PROPOSED INDEX CONTOUR
699	PROPOSED INTERMEDIATE CONTOUR
	PROPOSED DRAINAGE SWALE
	PROPOSED GRADE BREAK
	PROPOSED STORM SEWER LINE
	PROPOSED UNDERDRAIN
700.00	PROPOSED SPOT ELEVATION
700.50 / 700.00	PROPOSED CURB SPOT ELEVATION; TOP OF CURB ON TOP, GUTTER ELEVATION ON BOTTOM

ABBREVIATIONS:
TC = TOP OF CURB
BC = BOTTOM OF CURB
TW = TOP OF WALL
BW = BOTTOM OF WALL
TR = TOP OF RAMP
BR = BOTTOM OF RAMP
ME = MATCH EXISTING

REFERENCE:

1. SEE DRAWING C300 FOR GENERAL NOTES AND SHEET SPECIFIC NOTES.
2. CONTRACTOR SHALL REFER TO OTHER PLANS WITHIN THIS CONSTRUCTION SET FOR OTHER PERTINENT INFORMATION. IT IS NOT THE ENGINEER'S INTENT THAT ANY SINGLE PLAN SHEET IN THIS SET OF DOCUMENTS FULLY DEPICT ALL WORK ASSOCIATED WITH THE PROJECT.

SCALE IN FEET
0 30' 60'

PRELIMINARY
NOT FOR CONSTRUCTION

Indiana 811
Know what's below. Call before you dig.

NICHOLAS P. JUSTICE
REGISTERED
No. PE11800753
STATE OF INDIANA
PROFESSIONAL ENGINEER
08/09/2022

SUBMITTAL & REVISION RECORD

NO	DATE	DESCRIPTION

Civil & Environmental Consultants, Inc.
530 E. Ohio Street · Suite G · Indianapolis, IN 46204
317-655-7777 · 877-746-0749
www.cecinc.com

ECHO GREENWOOD, LLC
SMITH VALLEY ROAD RETAIL
SMITH VALLEY & MORGANTOWN ROAD
GREENWOOD, IN

GRADING PLAN

DATE:	AUGUST 9, 2022
DRAWN BY:	JAR
DWG SCALE:	1" = 30'
CHECKED BY:	DRAFT
PROJECT NO:	322-045
APPROVED BY:	DRAFT

DRAWING NO.: C302

P:\320-045\322-045\-CADD\Dwg\CV01\320045-CV01-C300.dwg[C302] LS:(8/9/2022 - 9:00AM) LP: 8/9/2022 2:44 PM

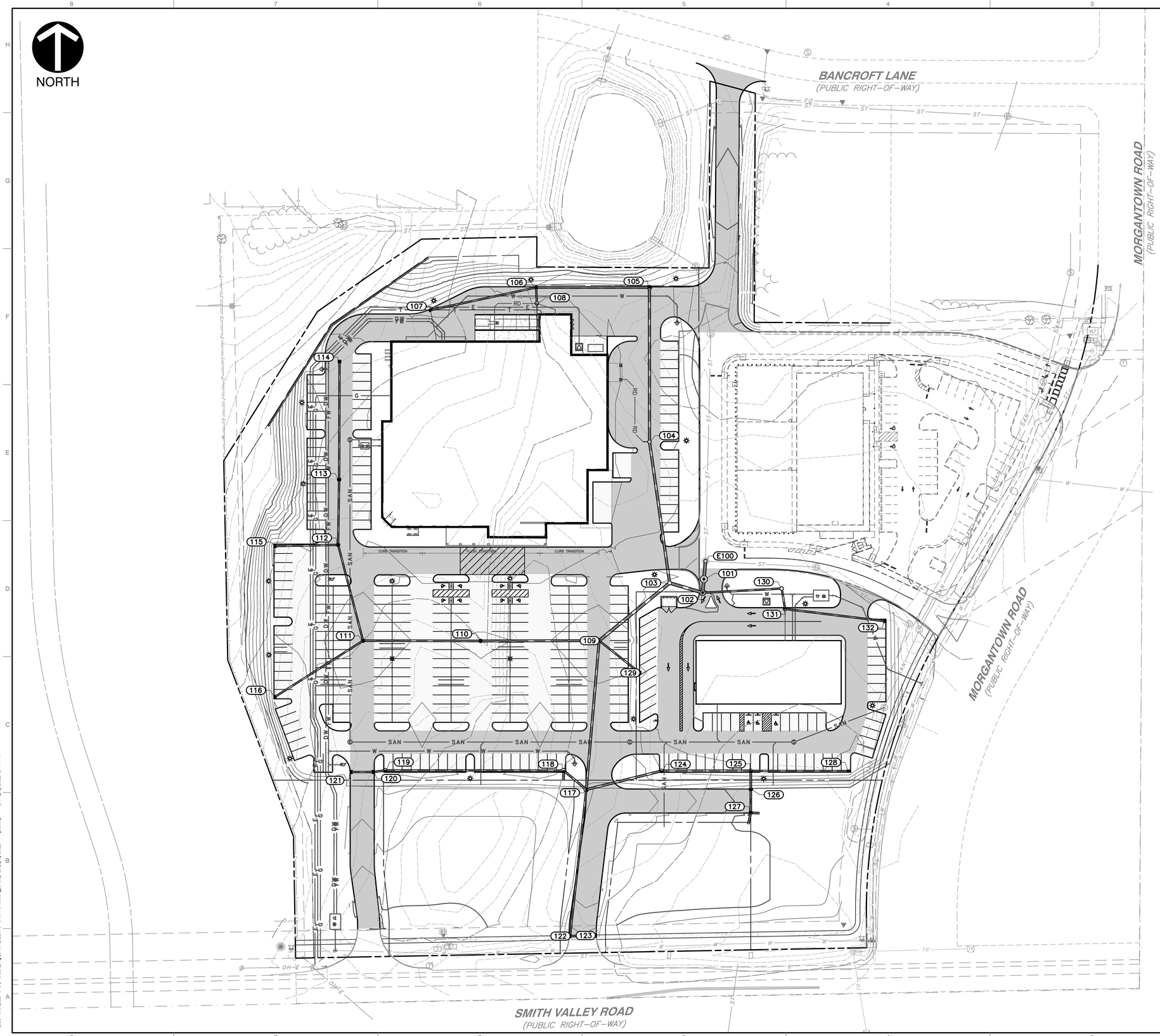

GENERAL DRAINAGE NOTES:

1. DISTANCES SHOWN ON PIPING ARE HORIZONTAL DISTANCES FROM CENTER OF STRUCTURE TO CENTER OF STRUCTURE, UNLESS OTHERWISE NOTED.
2. THE CONTRACTOR SHALL BE RESPONSIBLE FOR ALL COSTS ASSOCIATED WITH THE INSTALLATION, INSPECTION, TESTING AND FINAL ACCEPTANCE OF ALL NEW STORMWATER MANAGEMENT FACILITIES CONSTRUCTION. CONTRACTOR SHALL COORDINATE WITH ALL APPLICABLE REGULATING AGENCIES CONCERNING INSTALLATION, INSPECTION AND APPROVAL OF THE STORM DRAINAGE SYSTEM CONSTRUCTION.
3. ALL STORMWATER MANAGEMENT FACILITIES, INCLUDING COLLECTION AND CONVEYANCE STRUCTURES SHALL BE INSTALLED IN ACCORDANCE WITH ALL APPLICABLE LOCAL AND STATE CODES AND REGULATIONS.
4. ANY WORK PERFORMED IN THE LOCAL OR STATE RIGHT OF WAYS SHALL BE IN ACCORDANCE WITH THE APPLICABLE LOCAL OR STATE REQUIREMENTS. IT SHALL BE THE CONTRACTOR'S RESPONSIBILITY TO OBTAIN THE NECESSARY PERMITS FOR THE WORK, SCHEDULE NECESSARY INSPECTIONS, AND PROVIDE THE NECESSARY TRAFFIC CONTROL MEASURES AND DEVICES, ETC., FOR WORK PERFORMED IN THE RIGHT OF WAYS.
5. STORM PIPE MATERIAL OPTIONS ARE AS FOLLOWS: RCP OR HDPE, AS NOTED ON PLANS.

UTILITY NOTE:

THE UNDERGROUND UTILITIES SHOWN HAVE BEEN LOCATED FROM FIELD SURVEY INFORMATION AND EXISTING DRAWINGS. THE SURVEYOR MAKES NO GUARANTEES THAT THE UNDERGROUND UTILITIES COMPRISE ALL SUCH UTILITIES IN THE AREA, EITHER IN-SERVICE OR ABANDONED. THE SURVEYOR FURTHER DOES NOT WARRANT THAT THE UNDERGROUND UTILITIES SHOWN ARE IN THE EXACT LOCATION INDICATED ALTHOUGH THE SURVEYOR DOES CERTIFY THAT THEY ARE LOCATED AS ACCURATELY AS POSSIBLE FROM INFORMATION AVAILABLE. THE SURVEYOR HAS NOT PHYSICALLY LOCATED THE UNDERGROUND UTILITIES. INDIANA 811 ONE-CALL PUBLIC UTILITY LOCATE SERVICE TICKET NUMBERS 2204292249, 2204292299, AND 2204292346 WERE ISSUED FOR THIS SITE.

PRIOR TO ANY EXCAVATION FOR UNDERGROUND UTILITIES, THE CONTRACTOR SHALL EXPOSE AND VERIFY LOCATIONS (HORIZONTAL AND VERTICAL) OF ALL EXISTING UTILITIES INCLUDING BUT NOT LIMITED TO GAS, WATER, AND SANITARY SEWER. ANY CONFLICTS SHALL BE REPORTED IMMEDIATELY TO THE ENGINEER AND THE APPROPRIATE AUTHORITIES.

PROPOSED LEGEND:

	PROPOSED DITCH
	PROPOSED STORM SEWER LINE
	PROPOSED ROOF DRAINS
700	PROPOSED INDEX CONTOUR
699	PROPOSED INTERMEDIATE CONTOUR
	PROPOSED UNDERDRAIN
M.E.	MATCH EXISTING
TOR	TOP OF RIM
C.O.	CLEANOUT
	PROPOSED STORM CURB INLET, MANHOLE, CATCH BASIN

PRELIMINARY
NOT FOR CONSTRUCTION

Indiana 811
Know what's below. Call before you dig.

NICHOLAS P. JUNGE
REGISTERED
No. PE11800753
STATE OF INDIANA
PROFESSIONAL ENGINEER
08/09/2022

SUBMITTAL & REVISION RECORD

NO	DATE	DESCRIPTION

Civil & Environmental Consultants, Inc.
530 E. Ohio Street · Suite G · Indianapolis, IN 46204
317-655-7777 · 877-746-0749
www.ceinc.com

ECHO GREENWOOD, LLC
SMITH VALLEY ROAD RETAIL
SMITH VALLEY & MORGANTOWN ROAD
GREENWOOD, IN

OVERALL DRAINAGE PLAN

DATE:	AUGUST 9, 2022
DRAWN BY:	JAR
DWG SCALE:	1" = 50'
CHECKED BY:	DRAFT
PROJECT NO:	322-045
APPROVED BY:	DRAFT

DRAWING NO.: C400

P:\320-000\322-045\-CADD\dwg\CIVIL\322045-CIVIL-C400.dwg[C400] LS:(8/9/2022 - nplatko) - LP: 8/9/2022 2:44 PM

NORTH

REFERENCE:

1. SEE DRAWING C400 FOR GENERAL NOTES AND SHEET SPECIFIC NOTES.
2. CONTRACTOR SHALL REFER TO OTHER PLANS WITHIN THIS CONSTRUCTION SET FOR OTHER PERTINENT INFORMATION. IT IS NOT THE ENGINEER'S INTENT THAT ANY SINGLE PLAN SHEET IN THIS SET OF DOCUMENTS FULLY DEPICT ALL WORK ASSOCIATED WITH THE PROJECT.

PROPOSED LEGEND:

	PROPOSED DITCH
	PROPOSED STORM SEWER LINE
	PROPOSED ROOF DRAINS
700	PROPOSED INDEX CONTOUR
699	PROPOSED INTERMEDIATE CONTOUR
	PROPOSED UNDERDRAIN
M.E.	MATCH EXISTING
TOR	TOP OF RIM
C.O.	CLEANOUT
	PROPOSED STORM CURB INLET, MANHOLE, CATCH BASIN

BANCROFT LANE
(PUBLIC RIGHT-OF-WAY)

PLATTED DRAINAGE UTILITY & SANITARY SEWER EASEMENT PER P.B. D PG. 283

10' UTILITY EASEMENT PER INSTR. 97010378

STORM MANHOLE
TOR= 694.53
INV.(S)= 686.62 (24" RCP)
INV.(N)= 686.62 (24" RCP)

STORM MANHOLE
TOR= 699.58
INV.(E)= 688.42 (18" RCP)
INV.(SW)= 687.74 (18" RCP)

24" RCP
INV.= 686.68

18" RCP
INV.= 686.64

POND

BEEHIVE INLET
TOR= 692.17
INV.(E)= 690.13 (15" RCP)
INV.(W)= 686.44 (15" RCP)

15" RCP
INV.= 690.23

42" RCP
INV.= 686.62

STORM MANHOLE
TOR= 697.58
INV.(SE)= 686.96 (42" RCP)
INV.(NW)= 686.90 (42" RCP)

4' CHAIN FENCE
2'X2' BRICK COLUMN
6' WOOD FENCE
4' WOOD FENCE
15" RCP
INV.= 680.71
15" RCP
INV.= 680.05
BEEHIVE INLET
TOR= 682.26
INV.(E)= 680.20 (15" RCP)
INV.(W)= 673.66 (15" RCP)

4'ø MANHOLE
NEENAH R-3287-10V
RIM=697.63
INV. IN (15"W)=694.29
INV. IN (15"S)=691.37
INV. OUT (18"E)=691.27
(106)

18 LF 15" RCP @ 0.50%

INLET TYPE J
NEENAH R-3287-10V
RIM=698.05
INV. IN (12"S)=695.10
INV. OUT (15"E)=694.88
(107)

5'ø MANHOLE
NEENAH R-3287-10V
RIM=697.13
INV. IN (18"W)=690.33
INV. OUT (24"S)=690.19
(105)

125 LF 18" RCP @ 0.75%

4'ø MANHOLE
NEENAH R-1772
RIM=697.91
INV. IN (12"W)=694.58
INV. IN (12"S)=691.35
INV. IN (12"E)=695.20
INV. OUT (15"N)=691.46
(108)

119 LF 15" RCP @ 0.50%

INLET
RIM=697.52
INLET
RIM=697.90
INLET
RIM=697.14

INLET TYPE E
NEENAH R-3472
RIM=697.60
INV. OUT (15"S)=693.63
(114)

INLET
RIM=697.35

SEE ARCHITECTURAL PLANS FOR STORM DRAIN CONNECTION AT BUILDING.

SEE ARCHITECTURAL PLANS FOR STORM DRAIN CONNECTION AT BUILDING.

SEE ARCHITECTURAL PLANS FOR STORM DRAIN CONNECTION AT BUILDING.

130 LF 15" RCP @ 0.50%

PROPOSED RETAIL
±49,900 SF
F.F.E. = 698.75
196 STALLS FRONT FIELD
257 TOTAL STALLS

RETAIL PARCEL
±6.44 ACRES

4'ø MANHOLE
NEENAH R-3472
RIM=698.10
INV. IN (15"N)=692.98
INV. OUT (15"S)=692.88
(113)

INLET
RIM=697.31

72 LF 15" RCP @ 0.50%

4'ø MANHOLE
NEENAH R-2502
RIM=697.75
INV. IN (15"W)=694.22
INV. IN (15"N)=692.52
INV. OUT (15"S)=693.67
(112)

70 LF 15" RCP @ 0.40%

INLET
RIM=697.77

CURB TRANSITION
FLUSH CONDITION
CURB TRANSITION

AQUA-SWIRL XC-9
WQ UNIT
RIM=696.55
INV. IN (30"S)=688.29
INV. OUT (30"N)=688.29
(101)

4'ø MANHOLE
NEENAH R-4342
RIM=699.39
INV. IN (24"N)=689.11
INV. IN (30"SW)=689.02
INV. OUT (30"E)=688.92
(103)

INLET
RIM=697.04

170 LF 24" RCP @ 0.30%

4'ø MANHOLE
NEENAH R-3472
RIM=697.38
INV. IN (24"N)=689.68
INV. IN (8"W)=693.39
INV. OUT (24"S)=689.58
(104)

LOT 5
±2.41 ACRES
(NOT INCLUDED)

FUTURE
DAY CARE
(BY OTHERS)

157 LF 24" RCP @ 0.30%

STORM MANHOLE
TOR= 700.90
INV.(S)= 687.25 (42" RCP)
INV.(NW)= 687.15 (42" RCP)

STORM MANHOLE
TOR= 696.61
INV.(S)= 688.11 (24" RCP)
INV.(E)= 688.03 (36" RCP)
INV.(N)= 688.00 (42" RCP)
(SOUTH PIPE POSSIBLY STUBBED)

STORM MANHOLE
TOR= 697.43
INV.(E)= 689.25 (24" RCP)
INV.(W)= 689.03 (36" RCP)

EXISTING MANHOLE
RIM=696.30
INV. IN (30"S)=688.11
(E100)

SHARED ACCESS DRIVE

20 LF 30" RCP @ 0.90%

FARM FENCE

NO NOT-DIG

MATCHLINE - SEE SHEET C402

SCALE IN FEET
0 30' 60'

PRELIMINARY
NOT FOR CONSTRUCTION

Indiana 811
Know what's below. Call before you dig.

NICHOLAS P. JUSTICE
REGISTERED
No. PE11800753
STATE OF INDIANA
PROFESSIONAL ENGINEER
08/09/2022

SUBMITTAL & REVISION RECORD

NO	DATE	DESCRIPTION

Civil & Environmental Consultants, Inc.
530 E. Ohio Street · Suite G · Indianapolis, IN 46204
317-655-7777 · 877-746-0749
www.ceiinc.com

ECHO GREENWOOD, LLC
SMITH VALLEY ROAD RETAIL
SMITH VALLEY & MORGANTOWN ROAD
GREENWOOD, IN

DRAINAGE PLAN

DATE:	AUGUST 9, 2022
DRAWN BY:	JAR
DWG SCALE:	1" = 30'
CHECKED BY:	DRAFT
PROJECT NO:	322-045
APPROVED BY:	DRAFT

DRAWING NO.: C401

P:\320-099\322-045\-04001\Dwg\C401\322045-C401-C405.dwg[C401] LS:(8/9/2022 - sjustice) - LP: 8/9/2022 2:49 PM

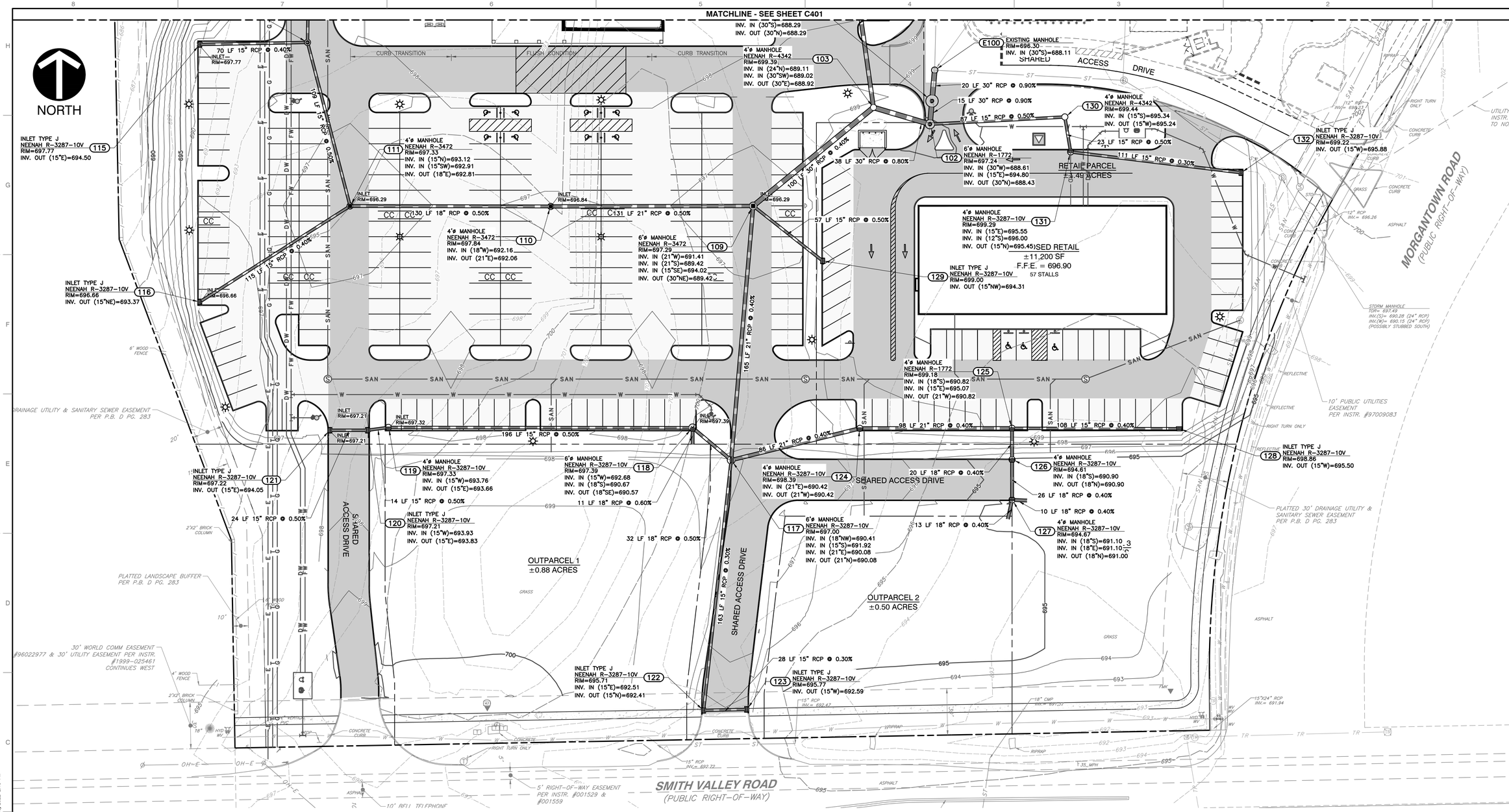

PROPOSED LEGEND:

	PROPOSED DITCH
	PROPOSED STORM SEWER LINE
	PROPOSED ROOF DRAINS
700	PROPOSED INDEX CONTOUR
699	PROPOSED INTERMEDIATE CONTOUR
	PROPOSED UNDERDRAIN
M.E.	MATCH EXISTING
TOR	TOP OF RIM
C.O.	CLEANOUT
	PROPOSED STORM CURB INLET, MANHOLE, CATCH BASIN

REFERENCE:

1. SEE DRAWING C400 FOR GENERAL NOTES AND SHEET SPECIFIC NOTES.
2. CONTRACTOR SHALL REFER TO OTHER PLANS WITHIN THIS CONSTRUCTION SET FOR OTHER PERTINENT INFORMATION. IT IS NOT THE ENGINEER'S INTENT THAT ANY SINGLE PLAN SHEET IN THIS SET OF DOCUMENTS FULLY DEPICT ALL WORK ASSOCIATED WITH THE PROJECT.

SCALE IN FEET
0 30' 60'

PRELIMINARY
NOT FOR CONSTRUCTION

Indiana 811
Know what's below. Call before you dig.

NICHOLAS P. JUSTICE
REGISTERED
No. PE11800753
STATE OF INDIANA
PROFESSIONAL ENGINEER
08/09/2022

SUBMITTAL & REVISION RECORD

NO	DATE	DESCRIPTION

CEC
Civil & Environmental Consultants, Inc.
530 E. Ohio Street · Suite G · Indianapolis, IN 46204
317-655-7777 · 877-746-0749
www.cecinc.com

ECHO GREENWOOD, LLC
SMITH VALLEY ROAD RETAIL
SMITH VALLEY & MORGANTOWN ROAD
GREENWOOD, IN

DRAINAGE PLAN

DATE:	AUGUST 9, 2022
DRAWN BY:	JAR
DWG SCALE:	1" = 30'
CHECKED BY:	DRAFT
PROJECT NO:	322-045
APPROVED BY:	DRAFT

DRAWING NO.:
C402

P:\320-005\322-045\-CADD\Dwg\CVD\322045-CVD1-C400.dwg\C402\ LS:(8/9/2022 - nicolas) - LP: 8/9/2022 2:45 PM

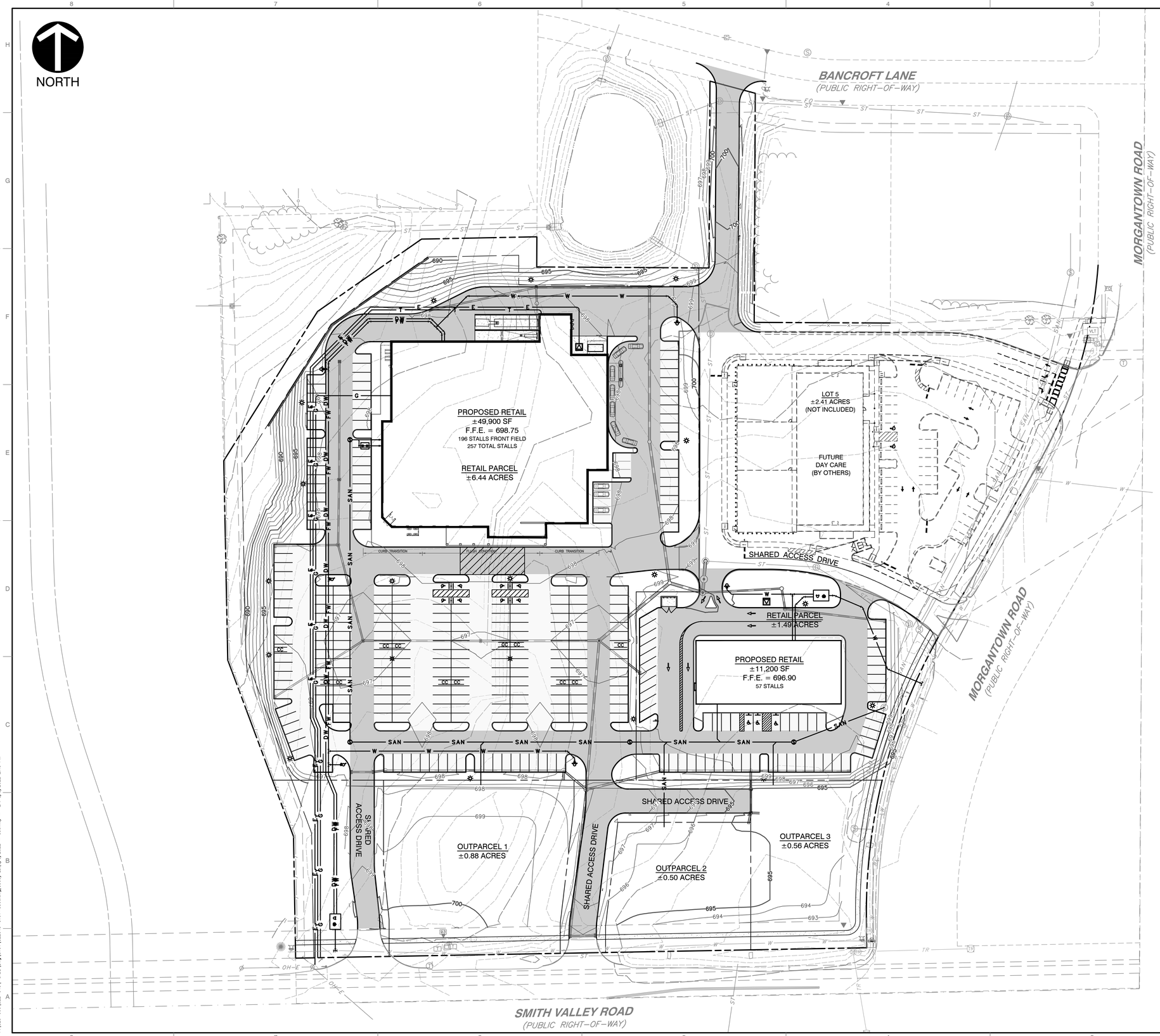

GENERAL UTILITY NOTES:

1. THE UTILITIES INDICATED ON THESE PLANS AND ON THE SURVEY MAY NOT BE A COMPLETE INVENTORY OF ALL THE EXISTING UTILITIES PRESENT ON AND AROUND THE SITE. THE LOCATION AND SIZE OF THESE UTILITIES MAY BE APPROXIMATE. THE ENGINEER SHALL NOT BE HELD LIABLE FOR ANY INACCURATE UTILITY INFORMATION INDICATED, IMPLIED, OR NOT INDICATED ON THESE PLANS.
2. IT SHALL BE THE CONTRACTOR'S RESPONSIBILITY TO LOCATE AND MAINTAIN IN SERVICE ALL EXISTING UTILITIES ENCOUNTERED DURING CONSTRUCTION UNLESS OTHERWISE INDICATED IN THE DRAWINGS. ANY PIPING, WHICH CAN BE REMOVED DURING CONSTRUCTION WITHOUT UNDUE INTERRUPTION OF SERVICE MAY BE REMOVED AND REPLACED BY THE CONTRACTOR, AT HIS EXPENSE WITH THE PERMISSION OF THE OWNER.
3. BEFORE WORKING WITH OR AROUND EXISTING UTILITIES, THE APPLICABLE UTILITY COMPANY SHALL BE CONTACTED BY THE CONTRACTOR.
4. WHEN CONNECTIONS ARE TO BE MADE TO EXISTING PIPING AND STRUCTURES OR WHERE CONSTRUCTION IS IN THE VICINITY OF EXISTING PIPING THE LOCATION AND ELEVATION OF THE EXISTING PIPING SHALL BE FIELD VERIFIED AND NOTIFICATION GIVEN TO THE OWNER IF THE EXISTING PIPING IS FOUND TO BE DIFFERENT THAN THAT SHOWN ON THE DRAWINGS.
5. FOR CLARITY OF THESE DRAWINGS, PIPES MAY NOT BE DRAWN TO SCALE OR EXACTLY LOCATED.
6. ALL NEW WATER LINES SHALL HAVE A MINIMUM OF 54 INCHES OF COVER.
7. MINIMUM OF 18 INCHES OF VERTICAL CLEARANCE SHALL BE PROVIDED BETWEEN NEW WATER AND SANITARY SEWER LINES. IF 18 INCHES OF CLEARANCE IS NOT PROVIDED THEN THE SEWER MUST BE CONSTRUCTED OF WATER WORKS GRADE DUCTILE IRON PIPE WITH MECHANICAL JOINTS WITHIN TEN FEET OF THE WATER LINE.
8. NEW 6" AND 8" SANITARY LATERALS SHALL BE SDR-35, SCHEDULE 80 OR SCHEDULE 40 PVC PIPE CONFORMING TO ASTM D2241, AND SHALL MEET THE DEFLECTION STANDARDS OF ASTM D-3303.
9. IT IS THE RESPONSIBILITY OF THE CONTRACTOR OR CONTRACTORS TO OBTAIN ALL FEDERAL, STATE, COUNTY, CITY OR LOCAL PERMITS FOR ANY AND ALL WORK REQUIRED UNLESS OTHERWISE NOTED. THE CONTRACTOR OR CONTRACTORS ARE RESPONSIBLE TO PAY FOR ALL REQUIRED PERMITS BY ANY OR ALL AGENCIES MENTIONED ABOVE UNLESS OTHERWISE NOTED IN THE CONTRACT OR SPECIFICATIONS. ALL ASSOCIATED BONDING REQUIREMENTS AND COSTS ARE INCIDENTAL TO THE CONTRACT.
10. THE CONTRACTOR SHALL VERIFY ALL DIMENSIONS AND ELEVATIONS IN THE FIELD PRIOR TO THE START OF CONSTRUCTION. THE CONTRACTOR SHALL BE RESPONSIBLE FOR ALL FIELD DIMENSIONS AND ELEVATIONS DURING THE ENTIRE CONSTRUCTION SCHEDULE. IF ANY DISCREPANCIES ARE FOUND IN THESE ENGINEERING PLANS FROM ACTUAL FIELD DIMENSIONS, THE CONTRACTOR SHALL CONTACT THE ENGINEER IMMEDIATELY.
11. ALL CONSTRUCTION METHODS AND MATERIALS MUST CONFORM TO CURRENT STANDARDS AND SPECIFICATIONS OF THE FEDERAL, STATE, COUNTY, CITY OR LOCAL REQUIREMENTS, WHICHEVER HAS JURISDICTION.
12. CONTRACTOR IS RESPONSIBLE FOR ELECTRIC, TELEPHONE, AND CABLE CONDUITS AND TRENCHING. COORDINATE WITH THE LOCAL UTILITY PROVIDERS AND MECHANICAL, ELECTRICAL AND PLUMBING PLANS FOR SIZES AND QUANTITIES.
13. WATER AND FIRE SERVICE SIZES AND CONNECTION LOCATIONS SHALL BE COORDINATED WITH THE MECHANICAL, ELECTRICAL AND PLUMBING PLANS.

UTILITY NOTE:

THE UNDERGROUND UTILITIES SHOWN HAVE BEEN LOCATED FROM FIELD SURVEY INFORMATION AND EXISTING DRAWINGS. THE SURVEYOR MAKES NO GUARANTEES THAT THE UNDERGROUND UTILITIES COMPRISE ALL SUCH UTILITIES IN THE AREA, EITHER IN-SERVICE OR ABANDONED. THE SURVEYOR FURTHER DOES NOT WARRANT THAT THE UNDERGROUND UTILITIES SHOWN ARE IN THE EXACT LOCATION INDICATED ALTHOUGH THE SURVEYOR DOES CERTIFY THAT THEY ARE LOCATED AS ACCURATELY AS POSSIBLE FROM INFORMATION AVAILABLE. THE SURVEYOR HAS NOT PHYSICALLY LOCATED THE UNDERGROUND UTILITIES. INDIANA 811 ONE-CALL PUBLIC UTILITY LOCATE SERVICE TICKET NUMBERS 2204292249, 2204292299, AND 2204292346 WERE ISSUED FOR THIS SITE.

PRIOR TO ANY EXCAVATION FOR UNDERGROUND UTILITIES, THE CONTRACTOR SHALL EXPOSE AND VERIFY LOCATIONS (HORIZONTAL AND VERTICAL) OF ALL EXISTING UTILITIES INCLUDING BUT NOT LIMITED TO GAS, WATER, AND SANITARY SEWER. ANY CONFLICTS SHALL BE REPORTED IMMEDIATELY TO THE ENGINEER AND THE APPROPRIATE AUTHORITIES.

PROPOSED LEGEND:

	PROPOSED STORM SEWER LINE
SAN	PROPOSED SANITARY LINE
E	PROPOSED ELECTRIC LINE
T	PROPOSED TELEPHONE LINE
G	PROPOSED GAS LINE
W	PROPOSED WATER LINE
	PROPOSED CONDUIT
	PROPOSED LIGHT POLE
	PROPOSED HYDRANT, POST INDICATOR VALVE WATER VALVE, FIRE DEPT. CONNECTION
	PROPOSED SANITARY MANHOLE, CLEAN OUT
	PROPOSED ELECTRIC TRANSFORMER

SCALE IN FEET
0 50' 100'

PRELIMINARY
NOT FOR CONSTRUCTION

Indiana 811
Know what's below. Call before you dig.

NICHOLAS P. JULIE
REGISTERED
No. PE11800753
STATE OF INDIANA
PROFESSIONAL ENGINEER
08/09/2022

SUBMITTAL & REVISION RECORD

NO	DATE	DESCRIPTION

Civil & Environmental Consultants, Inc.
530 E. Ohio Street · Suite G · Indianapolis, IN 46204
317-655-7777 · 877-746-0749
www.ceinc.com

ECHO GREENWOOD, LLC
SMITH VALLEY ROAD RETAIL
SMITH VALLEY & MORGANTOWN ROAD
GREENWOOD, IN

OVERALL UTILITY PLAN

DATE:	AUGUST 9, 2022	DRAWN BY:	JAR
DWG SCALE:	1" = 50'	CHECKED BY:	DRAFT
PROJECT NO:			322-045
APPROVED BY:			DRAFT

DRAWING NO.:
C500

P:\320-000\322-045\-CADD\Dwg\CV01\322045-CV01-C500.dwg[C500] LS:(8/9/2022 - bbennig) - LP: 8/9/2022 2:43 PM

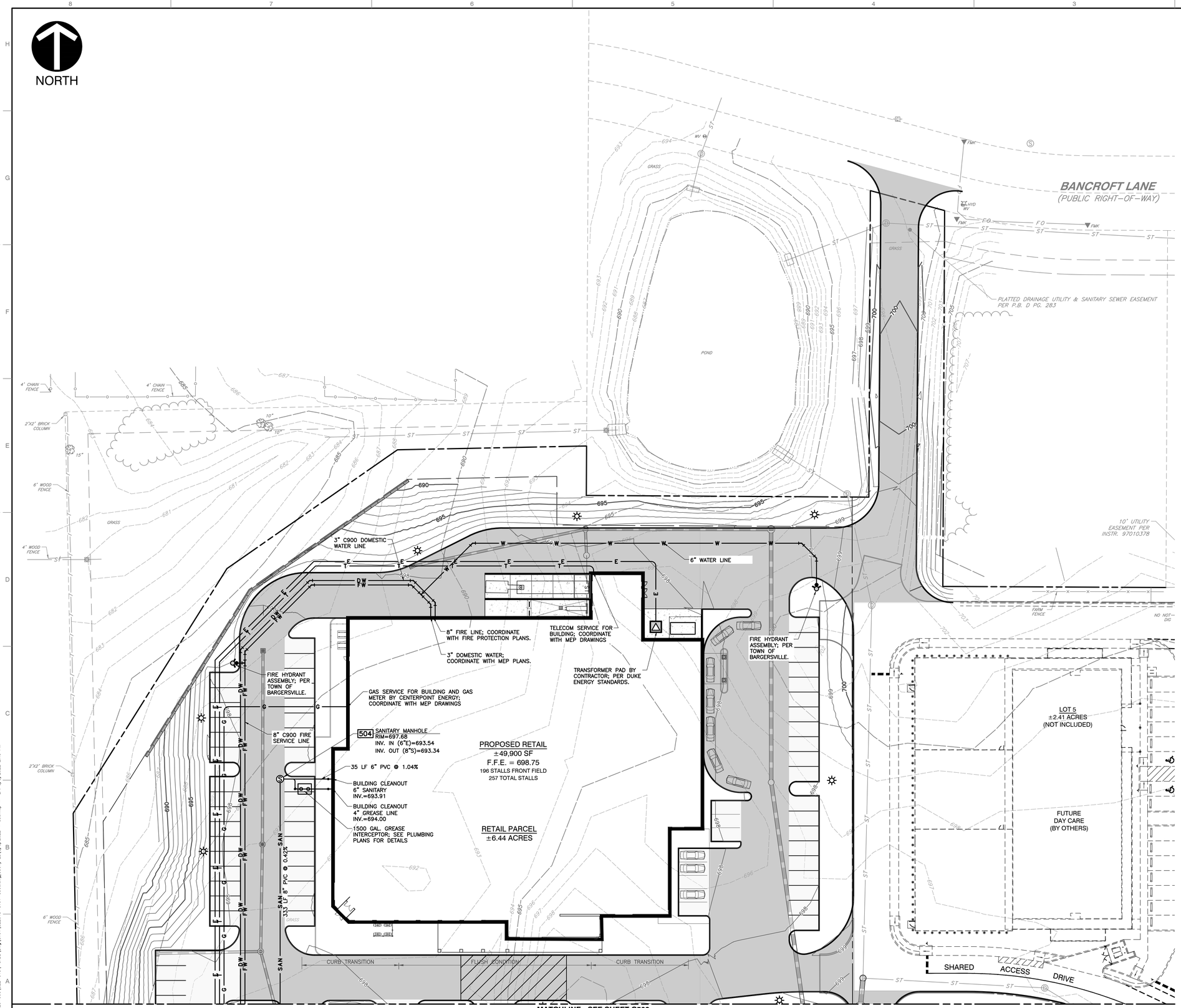

REFERENCE:

1. SEE DRAWING C500 FOR GENERAL NOTES AND SHEET SPECIFIC NOTES.
2. CONTRACTOR SHALL REFER TO OTHER PLANS WITHIN THIS CONSTRUCTION SET FOR OTHER PERTINENT INFORMATION. IT IS NOT THE ENGINEER'S INTENT THAT ANY SINGLE PLAN SHEET IN THIS SET OF DOCUMENTS FULLY DEPICT ALL WORK ASSOCIATED WITH THE PROJECT.

PROPOSED LEGEND:

	PROPOSED STORM SEWER LINE
SAN	PROPOSED SANITARY LINE
E	PROPOSED ELECTRIC LINE
T	PROPOSED TELEPHONE LINE
G	PROPOSED GAS LINE
W	PROPOSED WATER LINE
	PROPOSED CONDUIT
	PROPOSED LIGHT POLE
	PROPOSED HYDRANT, POST INDICATOR VALVE WATER VALVE, FIRE DEPT. CONNECTION
	PROPOSED SANITARY MANHOLE, CLEAN OUT
	PROPOSED ELECTRIC TRANSFORMER

GENERAL UTILITY NOTES:

1. THE UTILITIES INDICATED ON THESE PLANS AND ON THE SURVEY MAY NOT BE A COMPLETE INVENTORY OF ALL THE EXISTING UTILITIES PRESENT ON AND AROUND THE SITE. THE LOCATION AND SIZE OF THESE UTILITIES MAY BE APPROXIMATE. THE ENGINEER SHALL NOT BE HELD LIABLE FOR ANY INACCURATE UTILITY INFORMATION INDICATED, IMPLIED, OR NOT INDICATED ON THESE PLANS.
2. IT SHALL BE THE CONTRACTOR'S RESPONSIBILITY TO LOCATE AND MAINTAIN IN SERVICE ALL EXISTING UTILITIES ENCOUNTERED DURING CONSTRUCTION UNLESS OTHERWISE INDICATED IN THE DRAWINGS. ANY PIPING, WHICH CAN BE REMOVED DURING CONSTRUCTION WITHOUT UNDUE INTERRUPTION OF SERVICE MAY BE REMOVED AND REPLACED BY THE CONTRACTOR, AT HIS EXPENSE WITH THE PERMISSION OF THE OWNER.
3. BEFORE WORKING WITH OR AROUND EXISTING UTILITIES, THE APPLICABLE UTILITY COMPANY SHALL BE CONTACTED BY THE CONTRACTOR.
4. WHEN CONNECTIONS ARE TO BE MADE TO EXISTING PIPING AND STRUCTURES OR WHERE CONSTRUCTION IS IN THE VICINITY OF EXISTING PIPING THE LOCATION AND ELEVATION OF THE EXISTING PIPING SHALL BE FIELD VERIFIED AND NOTIFICATION GIVEN TO THE OWNER IF THE EXISTING PIPING IS FOUND TO BE DIFFERENT THAN THAT SHOWN ON THE DRAWINGS.
5. FOR CLARITY OF THESE DRAWINGS, PIPES MAY NOT BE DRAWN TO SCALE OR EXACTLY LOCATED.
6. ALL NEW WATER LINES SHALL HAVE A MINIMUM OF 54 INCHES OF COVER.
7. MINIMUM OF 18 INCHES OF VERTICAL CLEARANCE SHALL BE PROVIDED BETWEEN NEW WATER AND SANITARY SEWER LINES. IF 18 INCHES OF CLEARANCE IS NOT PROVIDED THEN THE SEWER MUST BE CONSTRUCTED OF WATER WORKS GRADE DUCTILE IRON PIPE WITH MECHANICAL JOINTS WITHIN TEN FEET OF THE WATER LINE.
8. NEW 6" AND 8" SANITARY LATERALS SHALL BE SDR-35, SCHEDULE 80 OR SCHEDULE 40 PVC PIPE CONFORMING TO ASTM D2241, AND SHALL MEET THE DEFLECTION STANDARDS OF ASTM D-3303.
9. IT IS THE RESPONSIBILITY OF THE CONTRACTOR OR CONTRACTORS TO OBTAIN ALL FEDERAL, STATE, COUNTY, CITY OR LOCAL PERMITS FOR ANY AND ALL WORK REQUIRED UNLESS OTHERWISE NOTED. THE CONTRACTOR OR CONTRACTORS ARE RESPONSIBLE TO PAY FOR ALL REQUIRED PERMITS BY ANY OR ALL AGENCIES MENTIONED ABOVE UNLESS OTHERWISE NOTED IN THE CONTRACT OR SPECIFICATIONS. ALL ASSOCIATED BONDING REQUIREMENTS AND COSTS ARE INCIDENTAL TO THE CONTRACT.
10. THE CONTRACTOR SHALL VERIFY ALL DIMENSIONS AND ELEVATIONS IN THE FIELD PRIOR TO THE START OF CONSTRUCTION. THE CONTRACTOR SHALL BE RESPONSIBLE FOR ALL FIELD DIMENSIONS AND ELEVATIONS DURING THE ENTIRE CONSTRUCTION SCHEDULE. IF ANY DISCREPANCIES ARE FOUND IN THESE ENGINEERING PLANS FROM ACTUAL FIELD DIMENSIONS, THE CONTRACTOR SHALL CONTACT THE ENGINEER IMMEDIATELY.
11. ALL CONSTRUCTION METHODS AND MATERIALS MUST CONFORM TO CURRENT STANDARDS AND SPECIFICATIONS OF THE FEDERAL, STATE, COUNTY, CITY OR LOCAL REQUIREMENTS, WHICHEVER HAS JURISDICTION.
12. CONTRACTOR IS RESPONSIBLE FOR ELECTRIC, TELEPHONE, AND CABLE CONDUITS AND TRENCHING. COORDINATE WITH THE LOCAL UTILITY PROVIDERS AND MECHANICAL, ELECTRICAL AND PLUMBING PLANS FOR SIZES AND QUANTITIES.
13. WATER AND FIRE SERVICE SIZES AND CONNECTION LOCATIONS SHALL BE COORDINATED WITH THE MECHANICAL, ELECTRICAL AND PLUMBING PLANS.

SCALE IN FEET
0 30' 60'

PRELIMINARY
NOT FOR CONSTRUCTION

Indiana 811
Know what's below. Call before you dig.

NICHOLAS P. HOLLIS REGISTERED No. PE11800753 STATE OF INDIANA PROFESSIONAL ENGINEER
08/09/2022

SUBMITTAL & REVISION RECORD

NO	DATE	DESCRIPTION

Civil & Environmental Consultants, Inc.
530 E. Ohio Street · Suite G · Indianapolis, IN 46204
317-655-7777 · 877-746-0749
www.cecinc.com

ECHO GREENWOOD, LLC
SMITH VALLEY ROAD RETAIL
SMITH VALLEY & MORGANTOWN ROAD
GREENWOOD, IN

UTILITY PLAN

DATE:	AUGUST 9, 2022
DRAWN BY:	JAR
DWG SCALE:	1" = 30'
CHECKED BY:	DRAFT
PROJECT NO:	322-045
APPROVED BY:	DRAFT

DRAWING NO.: C501

P:\320-000\322-045\-CADD\Dwg\CVS\322045-CV01-C500.dwg(C501) LS:(8/9/2022 - bkemp) - LP: 8/9/2022 2:45 PM

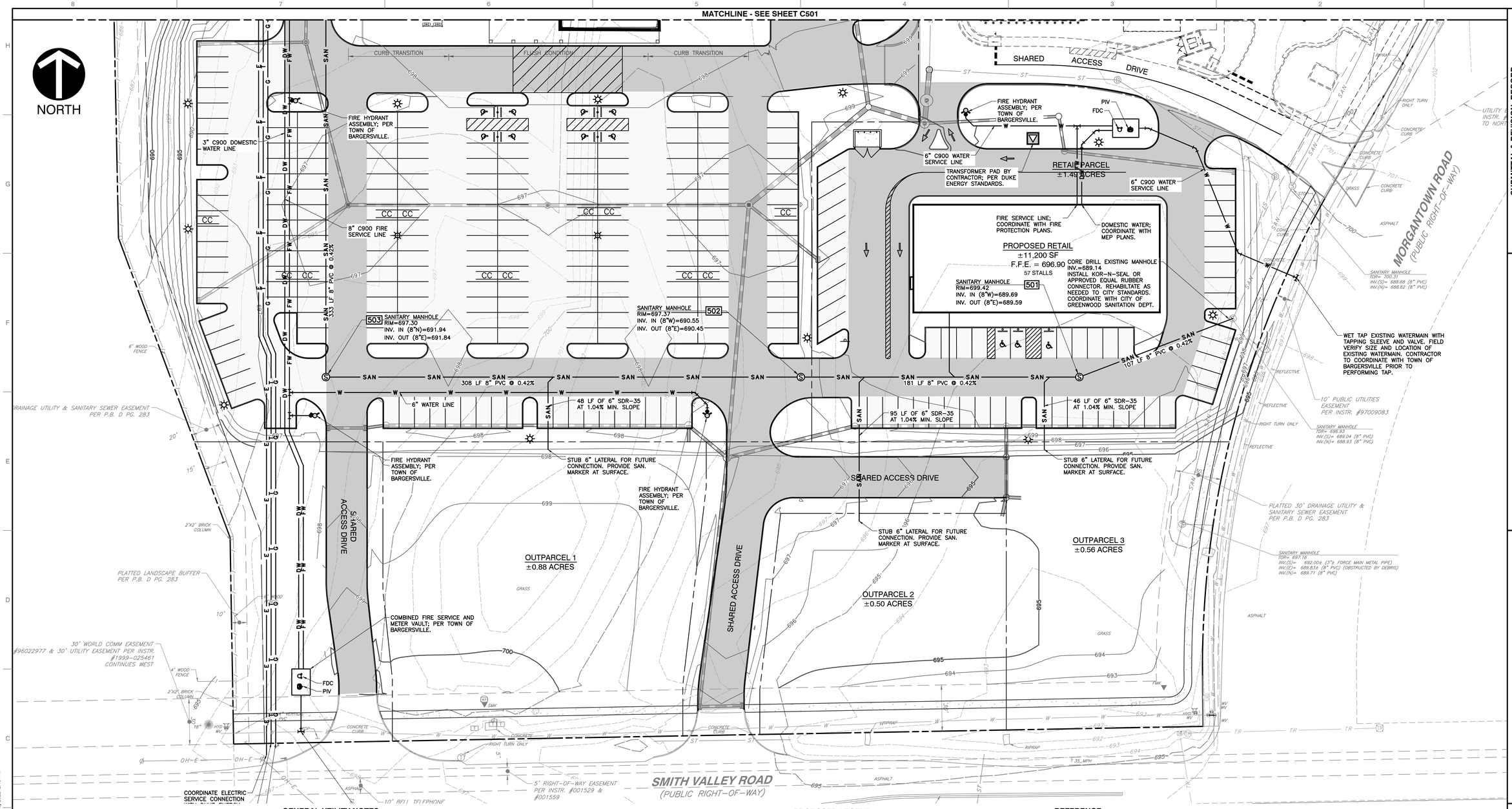

GENERAL UTILITY NOTES:

1. THE UTILITIES INDICATED ON THESE PLANS AND ON THE SURVEY MAY NOT BE A COMPLETE INVENTORY OF ALL THE EXISTING UTILITIES PRESENT ON AND AROUND THE SITE. THE LOCATION AND SIZE OF THESE UTILITIES MAY BE APPROXIMATE. THE ENGINEER SHALL NOT BE HELD LIABLE FOR ANY INACCURATE UTILITY INFORMATION INDICATED, IMPLIED, OR NOT INDICATED ON THESE PLANS.
2. IT SHALL BE THE CONTRACTOR'S RESPONSIBILITY TO LOCATE AND MAINTAIN IN SERVICE ALL EXISTING UTILITIES ENCOUNTERED DURING CONSTRUCTION UNLESS OTHERWISE INDICATED IN THE DRAWINGS. ANY PIPING, WHICH CAN BE REMOVED DURING CONSTRUCTION WITHOUT UNDUE INTERRUPTION OF SERVICE MAY BE REMOVED AND REPLACED BY THE CONTRACTOR, AT HIS EXPENSE WITH THE PERMISSION OF THE OWNER.
3. BEFORE WORKING WITH OR AROUND EXISTING UTILITIES, THE APPLICABLE UTILITY COMPANY SHALL BE CONTACTED BY THE CONTRACTOR.
4. WHEN CONNECTIONS ARE TO BE MADE TO EXISTING PIPING AND STRUCTURES OR WHERE CONSTRUCTION IS IN THE VICINITY OF EXISTING PIPING THE LOCATION AND ELEVATION OF THE EXISTING PIPING SHALL BE FIELD VERIFIED AND NOTIFICATION GIVEN TO THE OWNER IF THE EXISTING PIPING IS FOUND TO BE DIFFERENT THAN THAT SHOWN ON THE DRAWINGS.
5. FOR CLARITY OF THESE DRAWINGS, PIPES MAY NOT BE DRAWN TO SCALE OR EXACTLY LOCATED.
6. ALL NEW WATER LINES SHALL HAVE A MINIMUM OF 54 INCHES OF COVER.
7. MINIMUM OF 18 INCHES OF VERTICAL CLEARANCE SHALL BE PROVIDED BETWEEN NEW WATER AND SANITARY SEWER LINES. IF 18 INCHES OF CLEARANCE IS NOT PROVIDED THEN THE SEWER MUST BE CONSTRUCTED OF WATER WORKS GRADE DUCTILE IRON PIPE WITH MECHANICAL JOINTS WITHIN TEN FEET OF THE WATER LINE.
8. NEW 6" AND 8" SANITARY LATERALS SHALL BE SDR-35, SCHEDULE 80 OR SCHEDULE 40 PVC PIPE CONFORMING TO ASTM D2241, AND SHALL MEET THE DEFLECTION STANDARDS OF ASTM D-3303.
9. IT IS THE RESPONSIBILITY OF THE CONTRACTOR OR CONTRACTORS TO OBTAIN ALL FEDERAL, STATE, COUNTY, CITY OR LOCAL PERMITS FOR ANY AND ALL WORK REQUIRED UNLESS OTHERWISE NOTED. THE CONTRACTOR OR CONTRACTORS ARE RESPONSIBLE TO PAY FOR ALL REQUIRED PERMITS BY ANY OR ALL AGENCIES MENTIONED ABOVE UNLESS OTHERWISE NOTED IN THE CONTRACT OR SPECIFICATIONS. ALL ASSOCIATED BONDING REQUIREMENTS AND COSTS ARE INCIDENTAL TO THE CONTRACT.
10. THE CONTRACTOR SHALL VERIFY ALL DIMENSIONS AND ELEVATIONS IN THE FIELD PRIOR TO THE START OF CONSTRUCTION. THE CONTRACTOR SHALL BE RESPONSIBLE FOR ALL FIELD DIMENSIONS AND ELEVATIONS DURING THE ENTIRE CONSTRUCTION SCHEDULE. IF ANY DISCREPANCIES ARE FOUND IN THESE ENGINEERING PLANS FROM ACTUAL FIELD DIMENSIONS, THE CONTRACTOR SHALL CONTACT THE ENGINEER IMMEDIATELY.
11. ALL CONSTRUCTION METHODS AND MATERIALS MUST CONFORM TO CURRENT STANDARDS AND SPECIFICATIONS OF THE FEDERAL, STATE, COUNTY, CITY OR LOCAL REQUIREMENTS, WHICHEVER HAS JURISDICTION.
12. CONTRACTOR IS RESPONSIBLE FOR ELECTRIC, TELEPHONE, AND CABLE CONDUITS AND TRENCHING. COORDINATE WITH THE LOCAL UTILITY PROVIDERS AND MECHANICAL, ELECTRICAL AND PLUMBING PLANS FOR SIZES AND QUANTITIES.
13. WATER AND FIRE SERVICE SIZES AND CONNECTION LOCATIONS SHALL BE COORDINATED WITH THE MECHANICAL, ELECTRICAL AND PLUMBING PLANS.

PROPOSED LEGEND:

	PROPOSED STORM SEWER LINE
SAN	PROPOSED SANITARY LINE
E	PROPOSED ELECTRIC LINE
T	PROPOSED TELEPHONE LINE
G	PROPOSED GAS LINE
W	PROPOSED WATER LINE
	PROPOSED CONDUIT
	PROPOSED LIGHT POLE
	PROPOSED HYDRANT, POST INDICATOR VALVE WATER VALVE, FIRE DEPT. CONNECTION
S	PROPOSED SANITARY MANHOLE, CLEAN OUT
	PROPOSED ELECTRIC TRANSFORMER

REFERENCE:

1. SEE DRAWING C500 FOR GENERAL NOTES AND SHEET SPECIFIC NOTES.
2. CONTRACTOR SHALL REFER TO OTHER PLANS WITHIN THIS CONSTRUCTION SET FOR OTHER PERTINENT INFORMATION. IT IS NOT THE ENGINEER'S INTENT THAT ANY SINGLE PLAN SHEET IN THIS SET OF DOCUMENTS FULLY DEPICT ALL WORK ASSOCIATED WITH THE PROJECT.

SCALE IN FEET
0 30' 60'

PRELIMINARY NOT FOR CONSTRUCTION

Indiana 811 Know what's below. Call before you dig.

NICHOLAS P. JUSTICE REGISTERED No. PE11800753 STATE OF INDIANA PROFESSIONAL ENGINEER
08/09/2022

SUBMITTAL & REVISION RECORD

NO	DATE	DESCRIPTION

CEC
Civil & Environmental Consultants, Inc.
530 E. Ohio Street · Suite G · Indianapolis, IN 46204
317-655-7777 · 877-746-0749
www.cecinc.com

ECHO GREENWOOD, LLC
SMITH VALLEY ROAD RETAIL
SMITH VALLEY & MORGANTOWN ROAD
GREENWOOD, IN

UTILITY PLAN

DATE:	AUGUST 9, 2022
DRAWN BY:	JAR
DWG SCALE:	1" = 30'
CHECKED BY:	DRAFT
PROJECT NO:	322-045
APPROVED BY:	DRAFT

DRAWING NO.: C502

P:\320-000\322-045\-0400\Dwg\C101\322045-C101-C500.dwg(C502) LS:(8/9/2022 - bdennis) - LP: 8/9/2022 2:45 PM

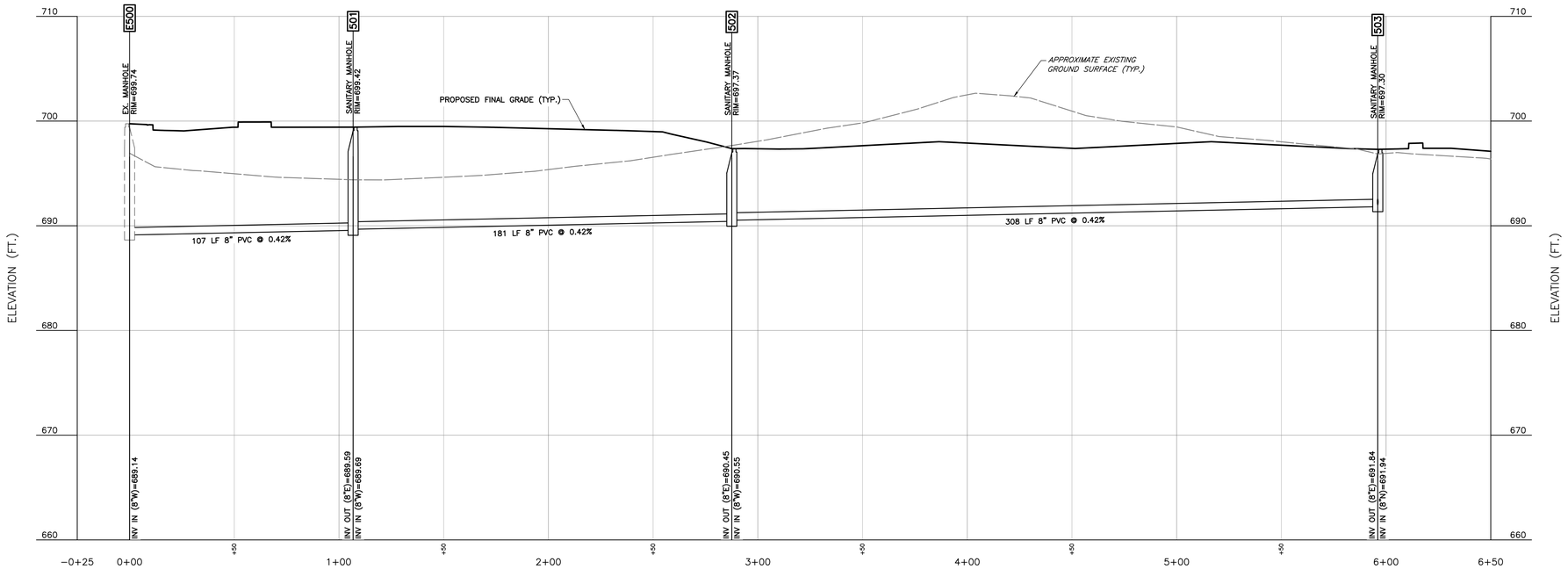

SANITARY RUN PROFILE

SCALE H:1"=30'; V:1"=6'

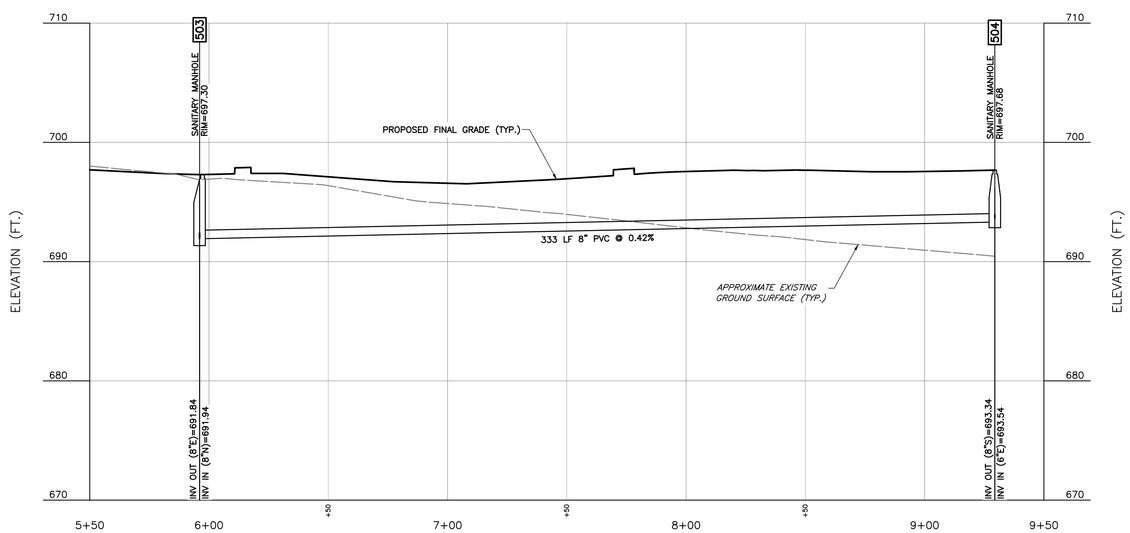

SANITARY RUN PROFILE

SCALE H:1"=30'; V:1"=6'

SCALE IN FEET (HORIZONTAL)
0 30 60

SCALE IN FEET (VERTICAL)
0 6 12

PRELIMINARY
NOT FOR CONSTRUCTION

REFERENCE:

1. SEE DRAWING C500 FOR GENERAL NOTES AND SHEET SPECIFIC NOTES.
2. CONTRACTOR SHALL REFER TO OTHER PLANS WITHIN THIS CONSTRUCTION SET FOR OTHER PERTINENT INFORMATION. IT IS NOT THE ENGINEER'S INTENT THAT ANY SINGLE PLAN SHEET IN THIS SET OF DOCUMENTS FULLY DEPICT ALL WORK ASSOCIATED WITH THE PROJECT.

Indiana 811
Know what's below. Call before you dig.

NICHOLAS P. JUSTICE
REGISTERED
No. PE11800753
STATE OF INDIANA
PROFESSIONAL ENGINEER
08/09/2022

SUBMITTAL & REVISION RECORD

NO	DATE	DESCRIPTION

Civil & Environmental Consultants, Inc.
530 E. Ohio Street · Suite G · Indianapolis, IN 46204
317-655-7777 · 877-746-0749
www.ceiinc.com

ECHO GREENWOOD, LLC
SMITH VALLEY ROAD RETAIL
SMITH VALLEY & MORGANTOWN ROAD
GREENWOOD, IN

SANITARY PROFILES

DATE:	AUGUST 9, 2022
DRAWN BY:	JAR
DWG SCALE:	1" = 30'
CHECKED BY:	DRAFT
PROJECT NO:	322-045
APPROVED BY:	DRAFT

DRAWING NO.:
C503

P:\320-009\322-045\-CADD\Dwg\CV01\322045-CV01-C500.dwg[C503] 15:09:9/2022 - bbennis) - LP: 8/9/2022 2:48 PM

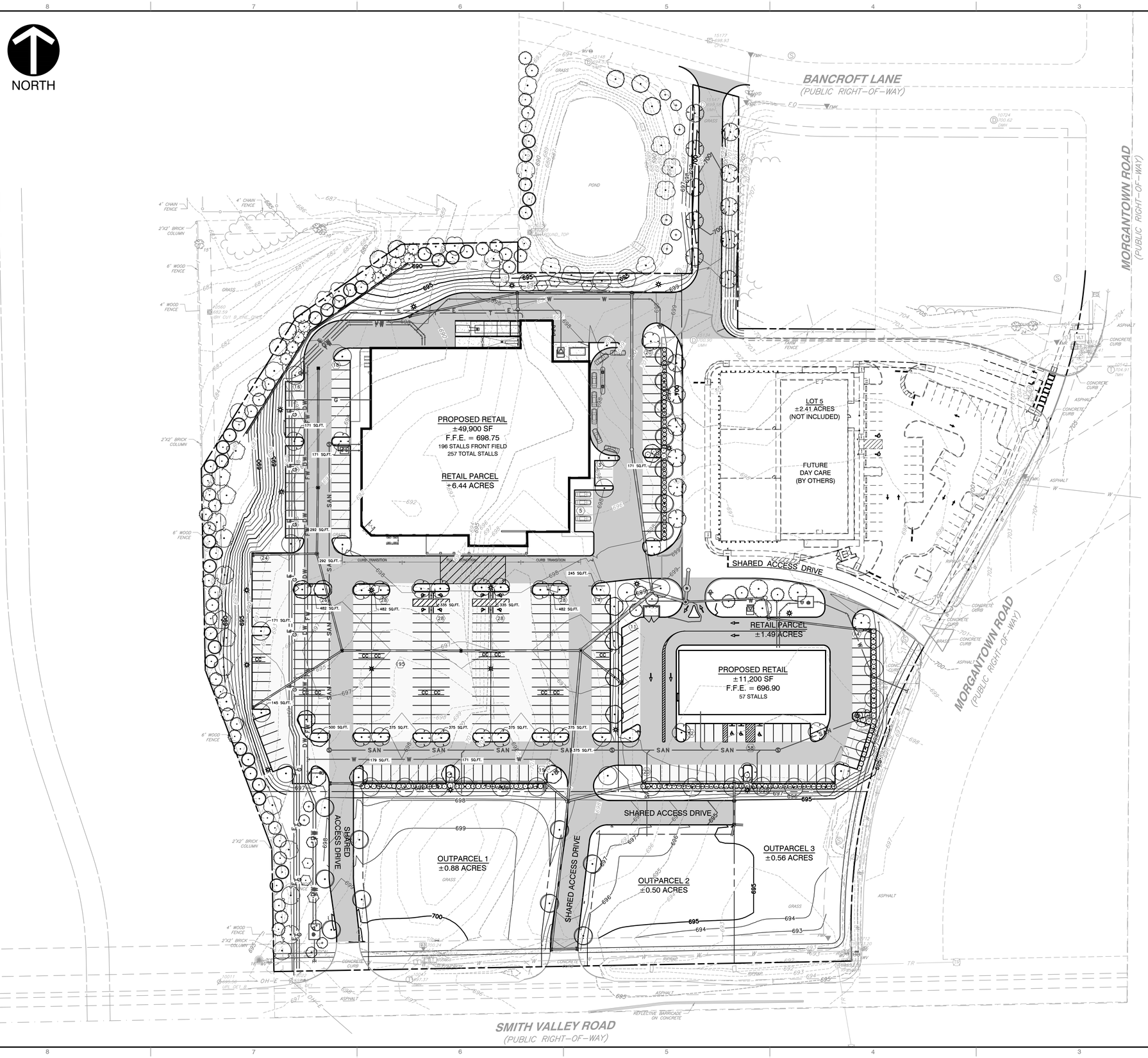

GENERAL LANDSCAPE NOTES:

1. ALL CONSTRUCTION METHODS AND MATERIALS MUST CONFORM TO CURRENT STANDARDS AND SPECIFICATIONS OF THE FEDERAL, STATE, COUNTY, CITY, OR LOCAL REQUIREMENTS, WHICHEVER HAS JURISDICTION.
2. THE CONTRACTOR SHALL VERIFY ALL DIMENSIONS AND ELEVATIONS IN THE FIELD PRIOR TO THE START OF CONSTRUCTION. THE CONTRACTOR SHALL BE RESPONSIBLE FOR ALL FIELD DIMENSIONS AND ELEVATIONS DURING THE ENTIRE CONSTRUCTION SCHEDULE. IF ANY DISCREPANCIES ARE FOUND IN THESE PLANS FROM ACTUAL FIELD DIMENSIONS, THE CONTRACTOR SHALL CONTACT THE ENGINEER IMMEDIATELY.
3. CONTRACTOR SHALL MAINTAIN ONE SET OF AS-BUILT/RECORD DRAWINGS ON THE JOB SITE DURING CONSTRUCTION FOR DISTRIBUTION TO THE OWNER AND/OR OWNER'S REPRESENTATIVE UPON COMPLETION.
4. NO CHANGES TO THE SITE LANDSCAPE LAYOUT ARE ALLOWED WITHOUT THE WRITTEN APPROVAL OF THE ENGINEER.
5. CONTRACTOR SHALL SUPPLY ALL PLANT MATERIALS IN QUALITY AND QUANTITIES SUFFICIENT TO COMPLETE THE PLANTING AS SHOWN ON DRAWINGS.
6. ALL MATERIAL SHALL CONFORM TO THE GUIDELINES ESTABLISHED BY THE CURRENT "AMERICAN ASSOCIATION OF NURSERY STOCK. ANSI Z60.1–2004", PUBLISHED BY THE AMERICAN ASSOCIATION OF NURSERYMAN.
7. NO PLANT SHALL BE PUT INTO THE GROUND BEFORE ROUGH GRADING HAS BEEN FINISHED AND APPROVED.
8. ALL PLANTS SHALL BE PLANTED SO THAT THE ROOT CROWN IS PLANTED AT GRADE LEVEL.
9. ALL PLANTS SHALL BE BALLED AND WRAPPED OR CONTAINER GROWN AS SPECIFIED. NO CONTAINER GROWN STOCK WILL BE ACCEPTED IF IT IS ROOT BOUND. ALL ROOT WRAPPING MATERIAL MADE OF SYNTHETICS OR PLASTICS SHALL BE REMOVED AT THE TIME OF PLANTING. TWINE OR ROPE SHALL BE REMOVED FROM AROUND CROWN OF TRUNK TO PREVENT GIRDLING OF TREE OR SHRUB.
10. WITH CONTAINER GROWN STOCK, THE CONTAINER SHALL BE REMOVED AND THE CONTAINER BALL SHALL BE CUT THROUGH THE SURFACE IN TWO VERTICAL LOCATIONS.
11. THE DAY PRIOR TO PLANTING, THE LOCATIONS OF ALL TREES AND SHRUBS SHALL BE STAKED FOR APPROVAL BY OWNER(S).
12. THE LANDSCAPE CONTRACTOR SHALL REFER TO CONTRACT SPECIFICATIONS FOR ADDITIONAL REQUIREMENTS.
13. THE LANDSCAPE CONTRACTOR SHALL GUARANTEE NEW PLANT MATERIAL THROUGH ONE (1) CALENDAR YEAR FROM THE TIME OF SUBSTANTIAL COMPLETION OF PROJECT.
14. IF THERE IS A DISCREPANCY BETWEEN THE PLANS AND THE PLANT SCHEDULE, THE PLANS SHALL TAKE PRECEDENCE.
15. CONTRACTOR SHALL REPAIR ANY DAMAGE TO PROPERTY FROM PLANTING OPERATIONS AT NO COST TO OWNER.
16. STAKES AND OR GUY WIRES SHALL BE REMOVED AFTER ONE (1) YEAR OF INSTALLATION.
17. ALL EXISTING LANDSCAPING SHALL BE MAINTAINED DURING CONSTRUCTION. ANY MATERIAL DEEMED DEAD OR UNSATISFACTORY BY LANDSCAPE ARCHITECT, WILL BE REPLACED EQUIVALENT IN SIZE AND SHAPE AT NO COST TO OWNER.
18. IF PLANT SPECIES SPECIFIED ARE FOUND TO BE UNAVAILABLE OR NOT IN SUFFICIENT QUANTITIES AT TIME OF PLANTING, THE CONTRACTOR MAY SUBSTITUTE SPECIES UPON WRITTEN APPROVAL BY LANDSCAPE ARCHITECT.

SYMBOL	DESCRIPTION
FN	FOUNDATION PLANTINGS
IN	INTERIOR PARCEL PLANTINGS
PR	PERIMETER PARKING LOT REQUIRED PLANTINGS
ST	STREET TREE PLANTINGS

1 PLANT QUANTITY
AG PLANT TYPE
PR REQ. LOCATION

SCALE IN FEET
0 50' 100'

PRELIMINARY
NOT FOR CONSTRUCTION

Indiana 811
Know what's below. Call before you dig.

NICHOLAS P. JUSTICE
REGISTERED
No. PE11800757
STATE OF INDIANA
PROFESSIONAL ENGINEER
08/09/2022

SUBMITTAL & REVISION RECORD

NO	DATE	DESCRIPTION

Civil & Environmental Consultants, Inc.
530 E. Ohio Street · Suite G · Indianapolis, IN 46204
317-655-7777 · 877-746-0749
www.ceinc.com

ECHO GREENWOOD, LLC
SMITH VALLEY ROAD RETAIL
SMITH VALLEY & MORGANTOWN ROAD
GREENWOOD, IN

OVERALL SITE LANDSCAPE PLAN

DATE:	AUGUST 9, 2022
DRAWN BY:	JAR
DWG SCALE:	1" = 50'
CHECKED BY:	DRAFT
PROJECT NO:	322-045
APPROVED BY:	DRAFT

DRAWING NO.: C700

P:\320-009\322-045\-CADD\Dwg\C701\322045-C701-C700.dwg[C700] LS(8/9/2022 - jheilman) - LP: 8/9/2022 2:48 PM

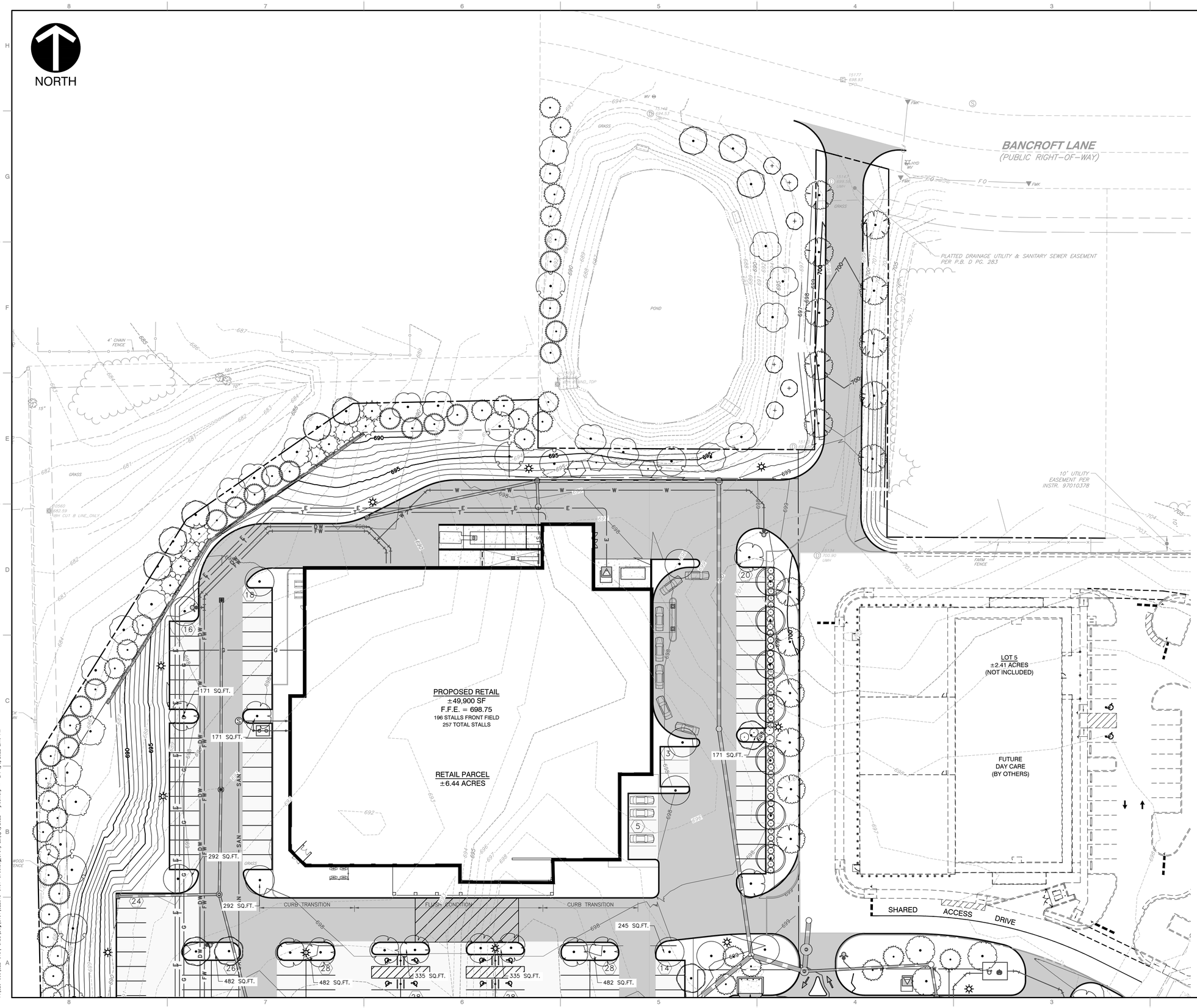

GENERAL LANDSCAPE NOTES:

1. ALL CONSTRUCTION METHODS AND MATERIALS MUST CONFORM TO CURRENT STANDARDS AND SPECIFICATIONS OF THE FEDERAL, STATE, COUNTY, CITY, OR LOCAL REQUIREMENTS, WHICHEVER HAS JURISDICTION.
2. THE CONTRACTOR SHALL VERIFY ALL DIMENSIONS AND ELEVATIONS IN THE FIELD PRIOR TO THE START OF CONSTRUCTION. THE CONTRACTOR SHALL BE RESPONSIBLE FOR ALL FIELD DIMENSIONS AND ELEVATIONS DURING THE ENTIRE CONSTRUCTION SCHEDULE. IF ANY DISCREPANCIES ARE FOUND IN THESE PLANS FROM ACTUAL FIELD DIMENSIONS, THE CONTRACTOR SHALL CONTACT THE ENGINEER IMMEDIATELY.
3. CONTRACTOR SHALL MAINTAIN ONE SET OF AS-BUILT/RECORD DRAWINGS ON THE JOB SITE DURING CONSTRUCTION FOR DISTRIBUTION TO THE OWNER AND/OR OWNER'S REPRESENTATIVE UPON COMPLETION.
4. NO CHANGES TO THE SITE LANDSCAPE LAYOUT ARE ALLOWED WITHOUT THE WRITTEN APPROVAL OF THE ENGINEER.
5. CONTRACTOR SHALL SUPPLY ALL PLANT MATERIALS IN QUALITY AND QUANTITIES SUFFICIENT TO COMPLETE THE PLANTING AS SHOWN ON DRAWINGS.
6. ALL MATERIAL SHALL CONFORM TO THE GUIDELINES ESTABLISHED BY THE CURRENT "AMERICAN ASSOCIATION OF NURSERY STOCK. ANSI Z60.1–2004", PUBLISHED BY THE AMERICAN ASSOCIATION OF NURSERYMAN.
7. NO PLANT SHALL BE PUT INTO THE GROUND BEFORE ROUGH GRADING HAS BEEN FINISHED AND APPROVED.
8. ALL PLANTS SHALL BE PLANTED SO THAT THE ROOT CROWN IS PLANTED AT GRADE LEVEL.
9. ALL PLANTS SHALL BE BALLED AND WRAPPED OR CONTAINER GROWN AS SPECIFIED. NO CONTAINER GROWN STOCK WILL BE ACCEPTED IF IT IS ROOT BOUND. ALL ROOT WRAPPING MATERIAL MADE OF SYNTHETICS OR PLASTICS SHALL BE REMOVED AT THE TIME OF PLANTING. TWINE OR ROPE SHALL BE REMOVED FROM AROUND CROWN OF TRUNK TO PREVENT GIRDLING OF TREE OR SHRUB.
10. WITH CONTAINER GROWN STOCK, THE CONTAINER SHALL BE REMOVED AND THE CONTAINER BALL SHALL BE CUT THROUGH THE SURFACE IN TWO VERTICAL LOCATIONS.
11. THE DAY PRIOR TO PLANTING, THE LOCATIONS OF ALL TREES AND SHRUBS SHALL BE STAKED FOR APPROVAL BY OWNER(S).
12. THE LANDSCAPE CONTRACTOR SHALL REFER TO CONTRACT SPECIFICATIONS FOR ADDITIONAL REQUIREMENTS.
13. THE LANDSCAPE CONTRACTOR SHALL GUARANTEE NEW PLANT MATERIAL THROUGH ONE (1) CALENDAR YEAR FROM THE TIME OF SUBSTANTIAL COMPLETION OF PROJECT.
14. IF THERE IS A DISCREPANCY BETWEEN THE PLANS AND THE PLANT SCHEDULE, THE PLANS SHALL TAKE PRECEDENCE.
15. CONTRACTOR SHALL REPAIR ANY DAMAGE TO PROPERTY FROM PLANTING OPERATIONS AT NO COST TO OWNER.
16. STAKES AND OR GUY WIRES SHALL BE REMOVED AFTER ONE (1) YEAR OF INSTALLATION.
17. ALL EXISTING LANDSCAPING SHALL BE MAINTAINED DURING CONSTRUCTION. ANY MATERIAL DEEMED DEAD OR UNSATISFACTORY BY LANDSCAPE ARCHITECT, WILL BE REPLACED EQUIVALENT IN SIZE AND SHAPE AT NO COST TO OWNER.
18. IF PLANT SPECIES SPECIFIED ARE FOUND TO BE UNAVAILABLE OR NOT IN SUFFICIENT QUANTITIES AT TIME OF PLANTING, THE CONTRACTOR MAY SUBSTITUTE SPECIES UPON WRITTEN APPROVAL BY LANDSCAPE ARCHITECT.

SYMBOL	DESCRIPTION
FN	FOUNDATION PLANTINGS
IN	INTERIOR PARCEL PLANTINGS
PR	PERIMETER PARKING LOT REQUIRED PLANTINGS
ST	STREET TREE PLANTINGS

1 PLANT QUANTITY
AG PLANT TYPE
PR REQ. LOCATION

SCALE IN FEET
0 30' 60'

PRELIMINARY
NOT FOR CONSTRUCTION

Indiana 811
Know what's below. Call before you dig.

NICHOLAS P. JUSTICE
REGISTERED
No. PE11800753
STATE OF INDIANA
PROFESSIONAL ENGINEER
08/09/2022

SUBMITTAL & REVISION RECORD

NO	DATE	DESCRIPTION

CEC
Civil & Environmental Consultants, Inc.
530 E. Ohio Street · Suite G · Indianapolis, IN 46204
317-655-7777 · 877-746-0749
www.cecinc.com

ECHO GREENWOOD, LLC
SMITH VALLEY ROAD RETAIL
SMITH VALLEY & MORGANTOWN ROAD
GREENWOOD, IN

SITE LANDSCAPE PLAN

DATE:	AUGUST 9, 2022
DRAWN BY:	BRF
DWG SCALE:	1" = 30'
CHECKED BY:	DRAFT
PROJECT NO:	322-045
APPROVED BY:	DRAFT

DRAWING NO.:
C701

P:\320-029\322-045\-CADD\Dwg\CVD\322045-CV01-C700.dwg\C701\ LS:(8/9/2022 - pedmon) - LP: 8/9/2022 2:46 PM

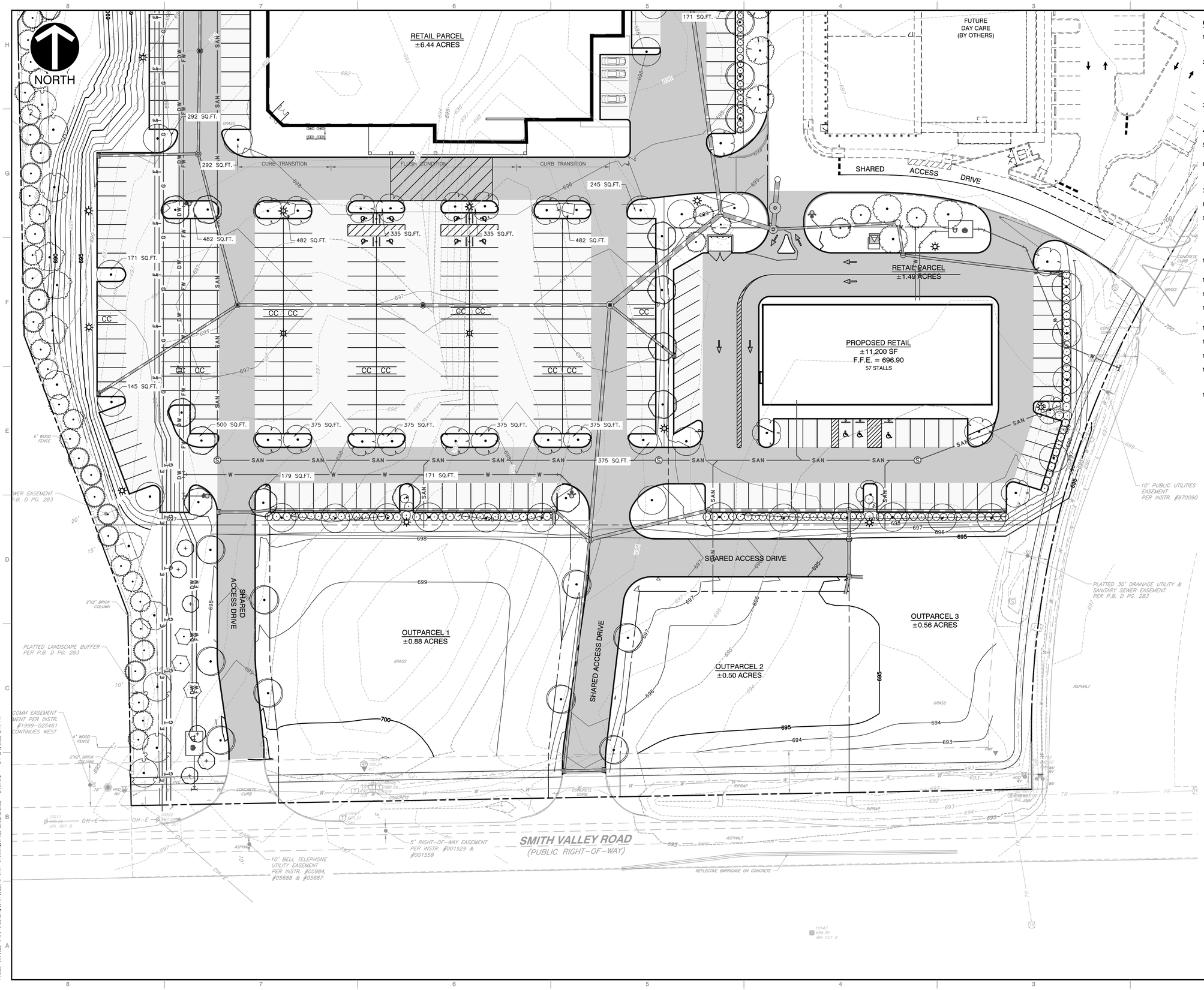

GENERAL LANDSCAPE NOTES:

1. ALL CONSTRUCTION METHODS AND MATERIALS MUST CONFORM TO CURRENT STANDARDS AND SPECIFICATIONS OF THE FEDERAL, STATE, COUNTY, CITY, OR LOCAL REQUIREMENTS, WHICHEVER HAS JURISDICTION.
2. THE CONTRACTOR SHALL VERIFY ALL DIMENSIONS AND ELEVATIONS IN THE FIELD PRIOR TO THE START OF CONSTRUCTION. THE CONTRACTOR SHALL BE RESPONSIBLE FOR ALL FIELD DIMENSIONS AND ELEVATIONS DURING THE ENTIRE CONSTRUCTION SCHEDULE. IF ANY DISCREPANCIES ARE FOUND IN THESE PLANS FROM ACTUAL FIELD DIMENSIONS, THE CONTRACTOR SHALL CONTACT THE ENGINEER IMMEDIATELY.
3. CONTRACTOR SHALL MAINTAIN ONE SET OF AS-BUILT/RECORD DRAWINGS ON THE JOB SITE DURING CONSTRUCTION FOR DISTRIBUTION TO THE OWNER AND/OR OWNER'S REPRESENTATIVE UPON COMPLETION.
4. NO CHANGES TO THE SITE LANDSCAPE LAYOUT ARE ALLOWED WITHOUT THE WRITTEN APPROVAL OF THE ENGINEER.
5. CONTRACTOR SHALL SUPPLY ALL PLANT MATERIALS IN QUALITY AND QUANTITIES SUFFICIENT TO COMPLETE THE PLANTING AS SHOWN ON DRAWINGS.
6. ALL MATERIAL SHALL CONFORM TO THE GUIDELINES ESTABLISHED BY THE CURRENT "AMERICAN ASSOCIATION OF NURSERY STOCK. ANSI Z60.1–2004", PUBLISHED BY THE AMERICAN ASSOCIATION OF NURSERYMAN.
7. NO PLANT SHALL BE PUT INTO THE GROUND BEFORE ROUGH GRADING HAS BEEN FINISHED AND APPROVED.
8. ALL PLANTS SHALL BE PLANTED SO THAT THE ROOT CROWN IS PLANTED AT GRADE LEVEL.
9. ALL PLANTS SHALL BE BALLED AND WRAPPED OR CONTAINER GROWN AS SPECIFIED. NO CONTAINER GROWN STOCK WILL BE ACCEPTED IF IT IS ROOT BOUND. ALL ROOT WRAPPING MATERIAL MADE OF SYNTHETICS OR PLASTICS SHALL BE REMOVED AT THE TIME OF PLANTING. TWINE OR ROPE SHALL BE REMOVED FROM AROUND CROWN OF TRUNK TO PREVENT GIRDLING OF TREE OR SHRUB.
10. WITH CONTAINER GROWN STOCK, THE CONTAINER SHALL BE REMOVED AND THE CONTAINER BALL SHALL BE CUT THROUGH THE SURFACE IN TWO VERTICAL LOCATIONS.
11. THE DAY PRIOR TO PLANTING, THE LOCATIONS OF ALL TREES AND SHRUBS SHALL BE STAKED FOR APPROVAL BY OWNER(S).
12. THE LANDSCAPE CONTRACTOR SHALL REFER TO CONTRACT SPECIFICATIONS FOR ADDITIONAL REQUIREMENTS.
13. THE LANDSCAPE CONTRACTOR SHALL GUARANTEE NEW PLANT MATERIAL THROUGH ONE (1) CALENDAR YEAR FROM THE TIME OF SUBSTANTIAL COMPLETION OF PROJECT.
14. IF THERE IS A DISCREPANCY BETWEEN THE PLANS AND THE PLANT SCHEDULE, THE PLANS SHALL TAKE PRECEDENCE.
15. CONTRACTOR SHALL REPAIR ANY DAMAGE TO PROPERTY FROM PLANTING OPERATIONS AT NO COST TO OWNER.
16. STAKES AND OR GUY WIRES SHALL BE REMOVED AFTER ONE (1) YEAR OF INSTALLATION.
17. ALL EXISTING LANDSCAPING SHALL BE MAINTAINED DURING CONSTRUCTION. ANY MATERIAL DEEMED DEAD OR UNSATISFACTORY BY LANDSCAPE ARCHITECT, WILL BE REPLACED EQUIVALENT IN SIZE AND SHAPE AT NO COST TO OWNER.
18. IF PLANT SPECIES SPECIFIED ARE FOUND TO BE UNAVAILABLE OR NOT IN SUFFICIENT QUANTITIES AT TIME OF PLANTING, THE CONTRACTOR MAY SUBSTITUTE SPECIES UPON WRITTEN APPROVAL BY LANDSCAPE ARCHITECT.

SYMBOL	DESCRIPTION
FN	FOUNDATION PLANTINGS
IN	INTERIOR PARCEL PLANTINGS
PR	PERIMETER PARKING LOT REQUIRED PLANTINGS
ST	STREET TREE PLANTINGS

1 PLANT QUANTITY
AG PLANT TYPE
PR REQ. LOCATION

SCALE IN FEET
0 30' 60'

PRELIMINARY
NOT FOR CONSTRUCTION

Indiana 811
Know what's below. Call before you dig.

NICHOLAS P. JUSTICE
REGISTERED
No. PE11800753
STATE OF INDIANA
PROFESSIONAL ENGINEER
08/09/2022

SUBMITTAL & REVISION RECORD

NO	DATE	DESCRIPTION

Civil & Environmental Consultants, Inc.
530 E. Ohio Street · Suite G · Indianapolis, IN 46204
317-655-7777 · 877-746-0749
www.ceinc.com

ECHO GREENWOOD, LLC
SMITH VALLEY ROAD RETAIL
SMITH VALLEY & MORGANTOWN ROAD
GREENWOOD, IN

SITE LANDSCAPE PLAN

DATE:	AUGUST 9, 2022
DRAWN BY:	BRF
DWG SCALE:	1" = 30'
CHECKED BY:	DRAFT
PROJECT NO:	322-045
APPROVED BY:	DRAFT

DRAWING NO.: **C702**

P:\320-050\322-045\-CADD\Dwg\CV01\322045-CV01-C700.dwg\C702\ LS:(8/9/2022 - pwdmas) - LP: 8/9/2022 2:46 PM

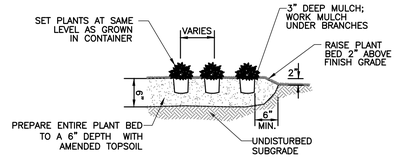

DETAIL 704 - ORNAMENTAL GRASS/ PERENNIAL AND GROUNDCOVER PLANTING DETAIL

NOT TO SCALE

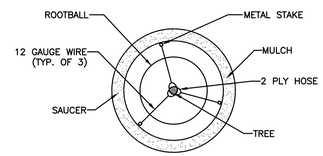

NOTE: LOCATE 1 STAKE DIRECTLY SOUTHWEST OF TREE TRUNK

DETAIL 703 - TREE STAKING DETAIL

NOT TO SCALE

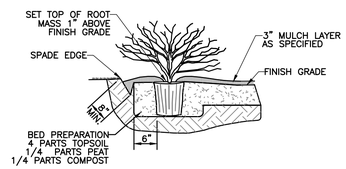

DETAIL 702- SHRUB/ SMALL TREE PLANTING DETAIL

NOT TO SCALE

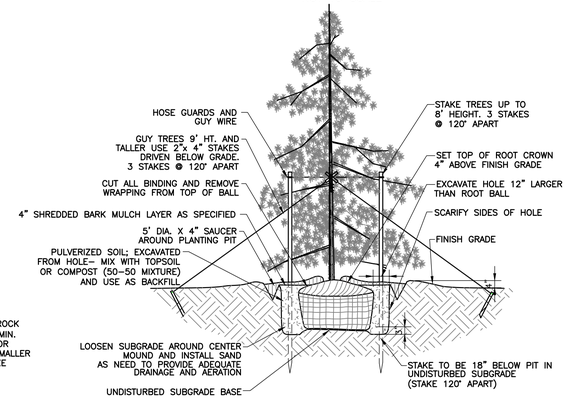

DETAIL 701 - EVERGREEN TREE PLANTING DETAIL

NOT TO SCALE

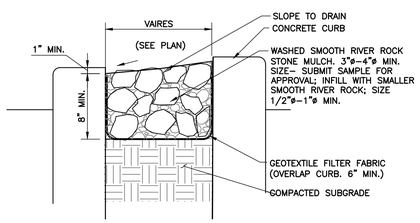

DETAIL 706 - STONE MULCH DETAIL

NOT TO SCALE

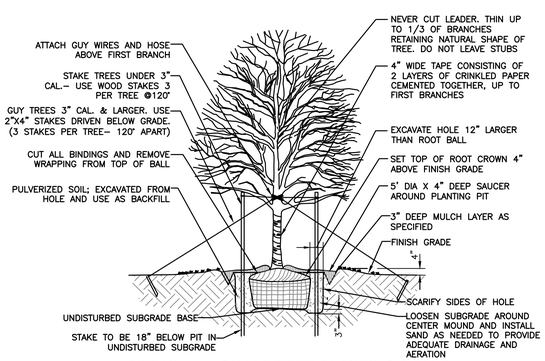

DETAIL 700- SHADE TREE PLANTING DETAIL

NOT TO SCALE

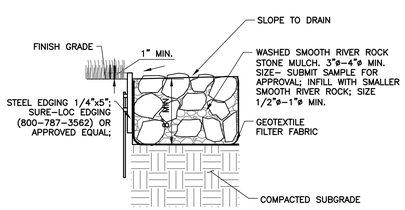

DETAIL 707 - STEEL EDGING DETAIL

NOT TO SCALE

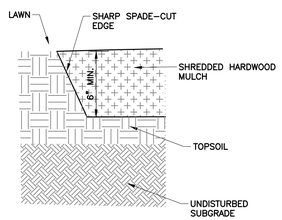

DETAIL 705 - SPADE EDGING DETAIL

NOT TO SCALE

PLANT SCHEDULE

TREES	CODE	QTY	BOTANICAL / COMMON NAME	CONT	CAL	SIZE
	AB	33	ACER RUBRUM 'BOWHALL' / BOWHALL RED MAPLE	B&B	2.5" CAL.	
	AO	12	ACER RUBRUM 'OCTOBER GLORY' / OCTOBER GLORY RED MAPLE	B&B	2.5" CAL.	
	AB2	17	ACER SACCHARUM 'BARRETT COLE' TM / APOLLO SUGAR MAPLE	B&B	2.5" CAL.	
	AM	9	ACER SACCHARUM 'PNI 0285' TM / GREEN MOUNTAIN SUGAR MAPLE	B&B	2.5" CAL.	
	AA	1	ACER X FREEMANII 'JEFFERSRED' TM / AUTUMN BLAZE FREEMAN MAPLE	B&B	2.5" CAL.	
	AG	13	AMELANCHIER X GRANDIFLORA 'AUTUMN BRILLIANCE' / AUTUMN BRILLIANCE APPLE SERVICEBERRY	B&B	CLUMP 6'	
	CE	7	CERCIS CANADENSIS / EASTERN REDBUD MULTI–TRUNK	B&B		1.5" CAL.
	CV	1	CRATAEGUS VIRIDIS 'WINTER KING' / WINTER KING HAWTHORN	B&B	2"	
	GS	14	GINKGO BILOBA 'SARATOGA' / SARATOGA MAIDENHAIR TREE	B&B	2.5" CAL.	
	GS2	27	GLEDITSIA TRIACANTHOS INERMIS 'SHADEMASTER' / SHADEMASTER HONEY LOCUST	B&B	2.5" CAL.	
	PA	42	PICEA ABIES / NORWAY SPRUCE	B&B		6' HT.
	PG	33	PICEA GLAUCA / WHITE SPRUCE	B&B		6' HT.
	PO	1	PICEA OMORIKA / SERBIAN SPRUCE	B&B		6'
	PN	10	PINUS NIGRA / AUSTRIAN PINE	B&B		6' HT.
	PB	9	PLATANUS X ACERIFOLIA 'BLOODGOOD' / BLOODGOOD LONDON PLANE TREE	B&B	2.5" CAL.	
	QB	12	QUERCUS BICOLOR / SWAMP WHITE OAK	B&B	2.5" CAL.	
	QC	7	QUERCUS COCCINEA / SCARLET OAK	B&B	2.5" CAL.	
	QR	4	QUERCUS RUBRA / RED OAK	B&B	2.5" CAL.	
	TG	17	TILIA CORDATA 'GREENSPIRE' / GREENSPIRE LITTLELEAF LINDEN	B&B	2.5" CAL.	
	UV	1	ULMUS AMERICANA 'VALLEY FORGE' / VALLEY FORGE AMERICAN ELM	B&B	2.5" CAL.	

SHRUBS	CODE	QTY	BOTANICAL / COMMON NAME	CONT	HT.	SPACING
	AS	1	ARONIA MELANOCARPA 'IROQUOIS BEAUTY' / IROQUOIS BEAUTY BLACK CHOKEBERRY	NO. 7 CONT.	18"–24" HT.	
	PX	1	DIERVILLA X 'G2X885411' TM / KODIAK RED DIERVILLA	NO. 7 CONT.	18"–24" HT.	
	HW	38	HYDRANGEA QUERCIFOLIA 'PEE WEE' / PEE WEE OAKLEAF HYDRANGEA	NO. 7 CONT.	24" HT.	
	HR	1	HYDRANGEA QUERCIFOLIA 'RUBY SLIPPERS' / RUBY SLIPPERS OAKLEAF HYDRANGEA	NO. 7 CONT.	24" HT.	
	JP	33	JUNIPERUS CHINENSIS 'KALLAYS COMPACT' / KALLAY COMPACT PFITZER JUNIPER	NO. 7 CONT.	18"–24" HT.	
	JO	65	JUNIPERUS VIRGINIANA 'GREY OWL' / GREY OWL EASTERN REDCEDAR	NO. 7 CONT.	18"–24" HT.	
	RG	18	RHUS AROMATICA 'GRO–LOW' / GRO–LOW FRAGRANT SUMAC	NO. 7 CONT.	18"–24" HT.	
	SS	1	SPIRAEA JAPONICA 'LITTLE PRINCESS' / LITTLE PRINCESS JAPANESE SPIREA	NO. 7 CONT.	15–18" HT	
	SA	1	SPIRAEA X BUMALDA 'ANTHONY WATERER' / ANTHONY WATERER SPIREA	NO. 7 CONT.	15–18" HT	
	SM	12	SYRINGA MEYERI 'PALIBIN' / DWARF KOREAN LILAC	NO. 7 CONT.	24" HT.	
	VC	1	VIBURNUM OPULUS 'COMPACTUM' / COMPACT EUROPEAN CRANBERRYBUSH	NO. 7 CONT.	24" HT.	
	VJ	1	VIBURNUM X JUDDII / JUDD VIBURNUM	NO. 7 CONT.	24" HT.	

PRELIMINARY
NOT FOR CONSTRUCTION

Indiana 811
Know what's below. Call before you dig.

NICHOLAS P. JUSTICE
REGISTERED
No. PE11800753
STATE OF INDIANA
PROFESSIONAL ENGINEER
08/09/2022

SUBMITTAL & REVISION RECORD

NO	DATE	DESCRIPTION

Civil & Environmental Consultants, Inc.
530 E. Ohio Street · Suite G · Indianapolis, IN 46204
317-655-7777 · 877-746-0749
www.ceiinc.com

ECHO GREENWOOD, LLC
SMITH VALLEY ROAD RETAIL
SMITH VALLEY & MORGANTOWN ROAD
GREENWOOD, IN

SITE LANDSCAPE DETAILS & PLANT SCHEDULE

DATE:	AUGUST 9, 2022
DRAWN BY:	BRF
DWG SCALE:	AS NOTED
CHECKED BY:	DRAFT
PROJECT NO:	322-045
APPROVED BY:	DRAFT

DRAWING NO.: C703

P:\320-050\322-045\-CADD\Dwg\CVP\322045-CV01-C703.dwg\C703\ LS:(8/9/2022 - jhedman) - LP: 8/9/2022 2:46 PM

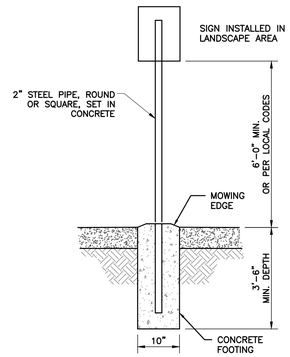

DETAIL 208 - SIGNAGE DETAIL
NOT TO SCALE

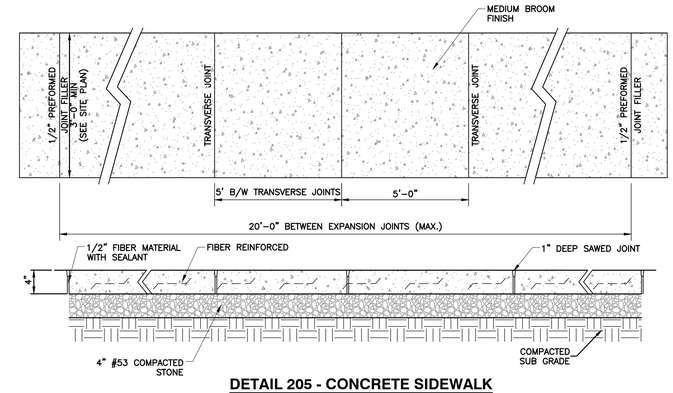

DETAIL 205 - CONCRETE SIDEWALK
NOT TO SCALE

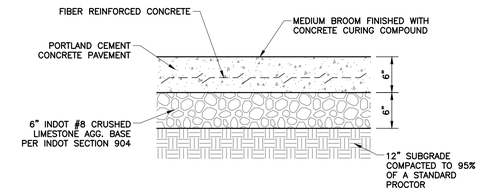

DETAIL 204 - CONCRETE PAVEMENT SECTION
NOT TO SCALE

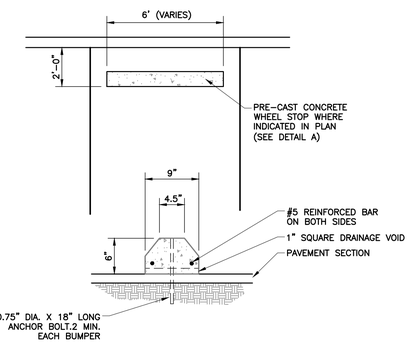

DETAIL 210 - CONCRETE WHEEL STOP
NOT TO SCALE

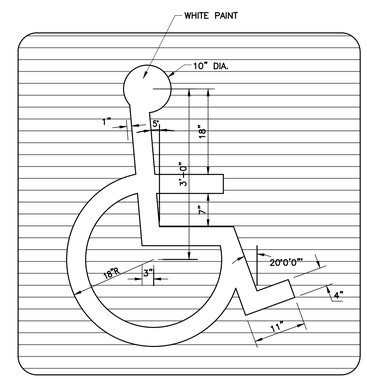

NOTE: ALL STRIPES TO BE 4" PAINTED WHITE

DETAIL 207 - PAINTED ADA ACCESSIBLE SYMBOL DETAIL
NOT TO SCALE

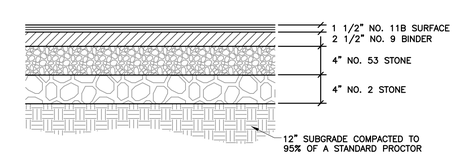

DETAIL 203 - LIGHT DUTY ASPHALT PAVEMENT SECTION
NOT TO SCALE

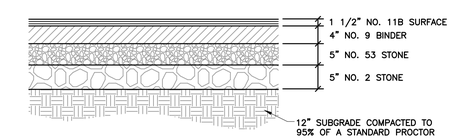

DETAIL 202 - HEAVY DUTY ASPHALT PAVEMENT SECTION
NOT TO SCALE

NOTE:
PAVEMENT SECTION PROVIDED AS A GUIDE.
REFER TO GEOTECH REPORT FOR RECOMMENDED PAVEMENT SECTION BASED ON SOIL CONDITIONS.

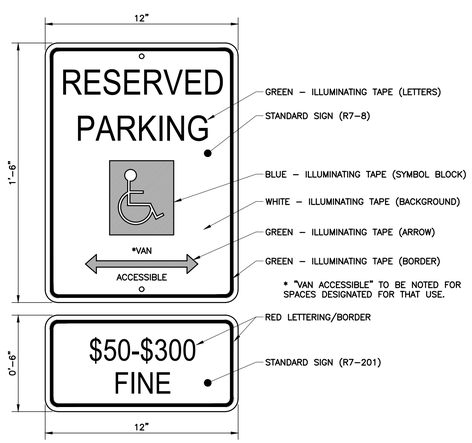

DETAIL 209 - ADA ACCESSIBLE PARKING SIGN DETAIL
NOT TO SCALE

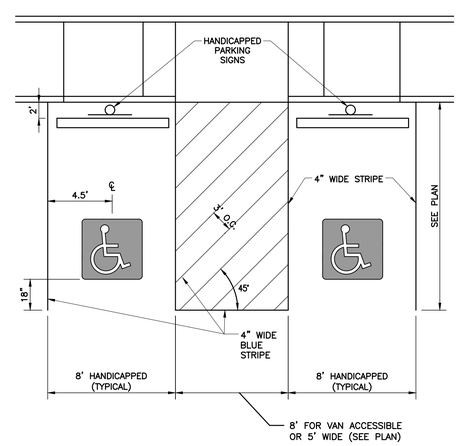

DETAIL 206 - ADA ACCESSIBLE PARKING STALLS
NOT TO SCALE

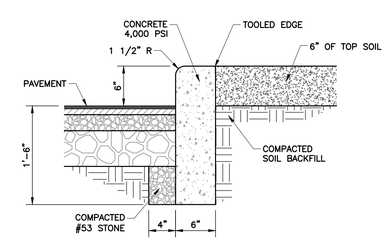

DETAIL 201 - STRAIGHT CONCRETE CURB DETAIL
NOT TO SCALE

PRELIMINARY
NOT FOR CONSTRUCTION

Indiana 811
Know what's below. Call before you dig.

NICHOLAS P. JUSTICE
REGISTERED
No. PE11800753
STATE OF INDIANA
PROFESSIONAL ENGINEER
08/09/2022

SUBMITTAL & REVISION RECORD

NO	DATE	DESCRIPTION

Civil & Environmental Consultants, Inc.
530 E. Ohio Street · Suite G · Indianapolis, IN 46204
317-655-7777 · 877-746-0749
www.ceiinc.com

ECHO GREENWOOD, LLC
SMITH VALLEY ROAD RETAIL
SMITH VALLEY & MORGANTOWN ROAD
GREENWOOD, IN

SITE DETAILS

DATE:	AUGUST 9, 2022
DRAWN BY:	JAR
DWG SCALE:	AS NOTED
CHECKED BY:	DRAFT
PROJECT NO:	322-045
APPROVED BY:	DRAFT

DRAWING NO.:
C800

P:\320-045\322-045\-CADD\Dwg\CV01\320045-CV01-C800.dwg[C800] LS:(8/9/2022 - jwalmsley) - LP: 8/9/2022 2:47 PM

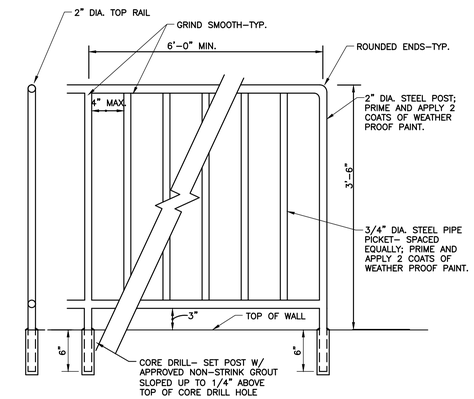

DETAIL 212 - GUARDRAIL DETAIL

NOT TO SCALE

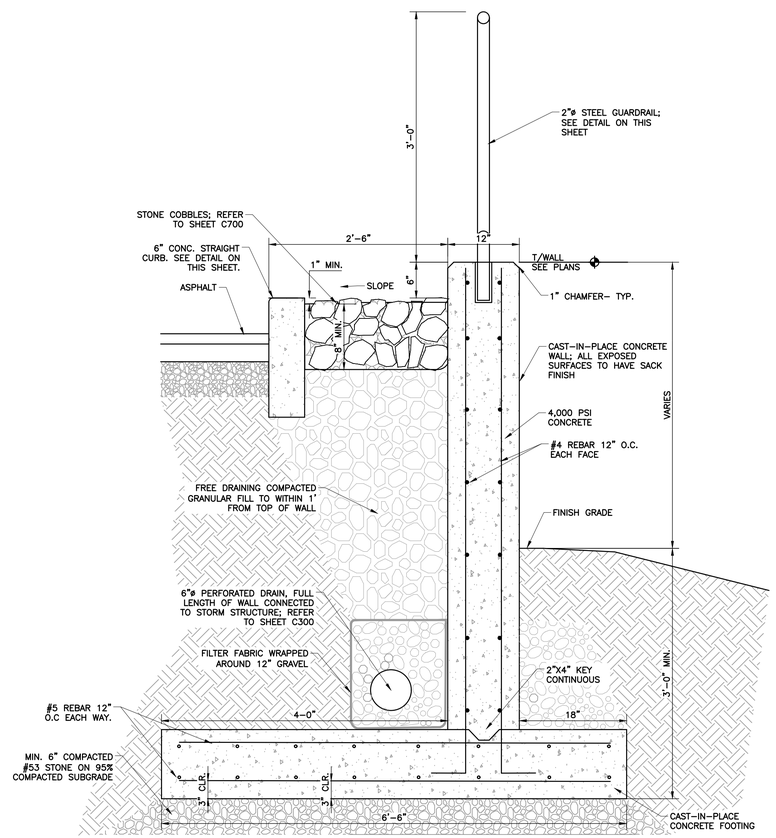

DETAIL 211 - CONCRETE RETAINING WALL

NOT TO SCALE

NOTE:
CONTRACTOR TO PROVIDE SHOP DRAWINGS TO ENGINEER FOR APPROVAL

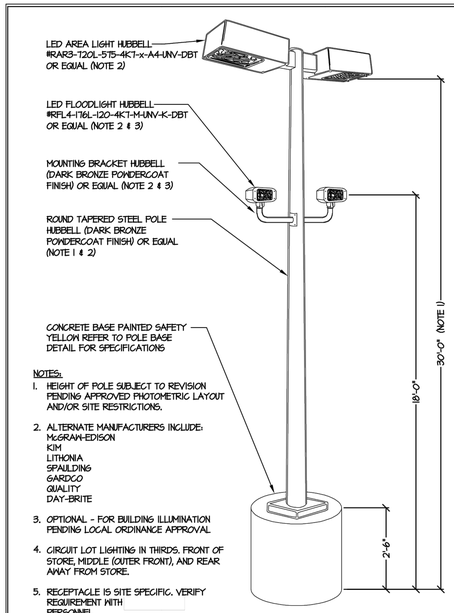

NOTES:

1. HEIGHT OF POLE SUBJECT TO REVISION PENDING APPROVED PHOTOMETRIC LAYOUT AND/OR SITE RESTRICTIONS.
2. ALTERNATE MANUFACTURERS INCLUDE:
   MCGRAW-EDISON
   KIM
   LITHONIA
   SPAULDING
   GARDCO
   QUALITY
   DAY-BRITE
3. OPTIONAL - FOR BUILDING ILLUMINATION PENDING LOCAL ORDINANCE APPROVAL
4. CIRCUIT LOT LIGHTING IN THIRDS. FRONT OF STORE, MIDDLE (OUTER FRONT), AND REAR AWAY FROM STORE.
5. RECEPTACLE IS SITE SPECIFIC. VERIFY REQUIREMENT WITH PERSONNEL

ROUND TAPERED POLE SIDE MOUNT

REF.	SC1
SCALE	NO SCALE
DATE	

ST4 / SC1B

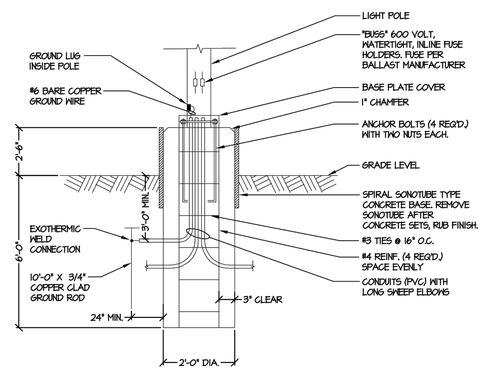

LIGHT POLE BASE DETAIL

REF.	SC1
SCALE	NONE
DATE	

ST5 / SC1B

PRELIMINARY
NOT FOR CONSTRUCTION

Indiana 811
Know what's below. Call before you dig.

NICHOLAS P. JUSTICE
REGISTERED
No. PE11800753
STATE OF INDIANA
PROFESSIONAL ENGINEER
08/09/2022

SUBMITTAL & REVISION RECORD

NO	DATE	DESCRIPTION

Civil & Environmental Consultants, Inc.
530 E. Ohio Street · Suite G · Indianapolis, IN 46204
317-655-7777 · 877-746-0749
www.ceiinc.com

ECHO GREENWOOD, LLC
SMITH VALLEY ROAD RETAIL
SMITH VALLEY & MORGANTOWN ROAD
GREENWOOD, IN

SITE DETAILS

DATE:	AUGUST 9, 2022
DRAWN BY:	JAR
DWG SCALE:	AS NOTED
CHECKED BY:	DRAFT
PROJECT NO:	322-045
APPROVED BY:	DRAFT

DRAWING NO.: C801

P:\320-045\322-045-CA001\Dwg\CVD\322045-CV01-C800.dwg\C801 LS:(8/9/2022 - jwalmsley) - LP: 8/9/2022 2:47 PM

Aqua-Swirl Polymer Coated Steel (PCS)
Stormwater Treatment System

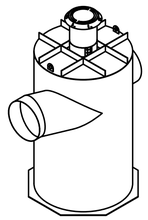

Projected View
SCALE 1:80

Unless other traffic barriers are present, bollards shall be placed around access riser(s) in non-traffic areas to prevent inadvertent loading by maintenance vehicles.

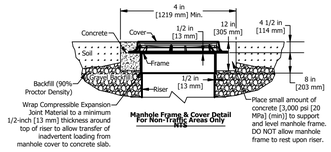

Manhole Frame & Cover Detail For Non-Traffic Areas Only
NTS

If traffic loading (HS-25) is required or anticipated, a 4-foot [1.22 m] diameter, 14-inch [356 mm] thick reinforced concrete pad must be placed over the Stormwater Treatment System Riser to support and level the manhole frame, as shown. The top of riser pipe must be wrapped with compressible expansion joint material to a minimum 1/2-inch [13 mm] thickness to allow transfer of wheel loads from manhole cover to concrete slab. Manhole cover shall bear on concrete slab and not on riser pipe. The concrete slab shall have a minimum strength of 3,000 psi [20 MPa] and be reinforced with #4 [13 mm] reinforcing steel as shown. Minimum cover over reinforcing steel shall be 1-inch [25 mm]. Top of manhole cover and concrete slab shall be level with finish grade.

Manhole Frame & Cover Detail For Traffic Loading Areas
NTS

Please see accompanied Aqua-Swirl specification notes. See Site Plan for actual System orientation. Approximate dry (pick) weight: 5900 lbs [2700 kg].

1. As an alternative, 42 in [1067 mm] diameter, HS-20/25 rated precast concrete rings may be substituted. 14 in [356 mm] thickness must be maintained.
2. XC-9 inlet/outlet pipe size ranges up to 48 in [1219 mm].
3. XC-9 chamber height may vary up to 178 in [4521 mm], depending on inlet/outlet pipe size.
4. Orientation may vary from a minimum of 90° to a maximum of 180°. Clockwise or counterclockwise orientation as needed.

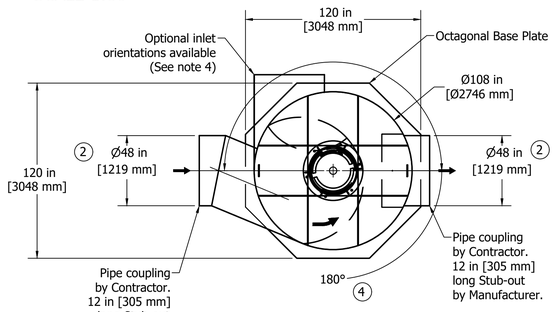

Plan View
SCALE 1:50

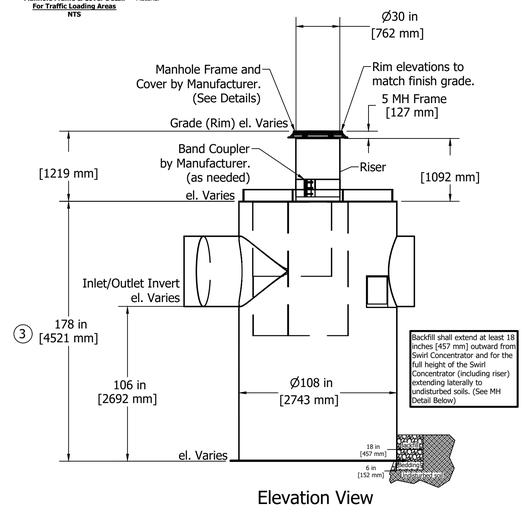

Elevation View
SCALE 1:50

AquaShield™ WATER TREATMENT SOLUTIONS 2733 Kanasita Drive, Suite 111, Chattanooga, TN 37343 Phone (888) 344-9044 Fax (423) 826-2112 www.aquashieldinc.com	Aqua-Swirl XCelerator XC-9 CCW STD Aqua-Swirl Stormwater Treatment System Standard Detail	Structure #: XC-9 STD Drawn By: OFlores Scale: As Shown Date: 6/26/2019 U.S. Patent No. 6524473 and other Patent Pending	Rvwed / Rvw. Date

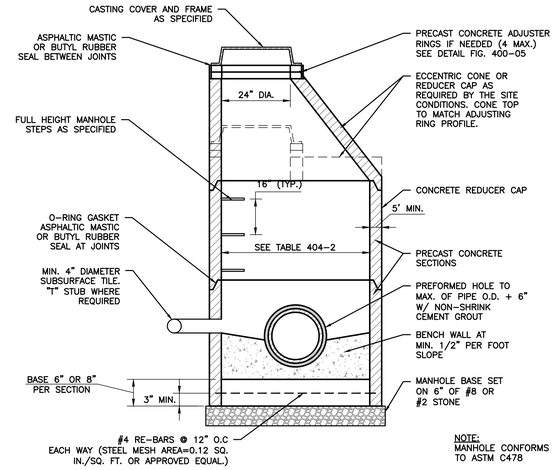

DETAIL 402 - STANDARD MANHOLE FOR PIPE SIZES 12" thru 24"
NOT TO SCALE

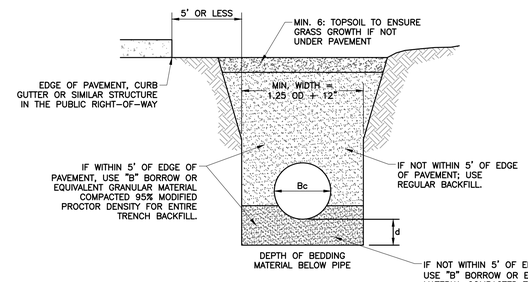

LEGEND
Bc = OUTSIDE DIAMETER
D = INSIDE DIAMETER
d = DEPTH OF BEDDING MATERIAL BELOW PIPE

ID	d (MIN)
27" & SMALLER	3"
30" TO 60"	4"
66" & LARGER	6"

NOTES:
1. ALL BEDDING & INITIAL BACKFILL SHALL BE INSTALLED IN 6" TO 12" BALANCED LIFTS.
2. A MINIMUM 9" OF CLEARANCE SHALL BE PROVIDED ON EACH SIDE OF THE INSTALLED PIPE.

DETAIL 401 - REINFORCED CONCRETE PIPE (RCP) BEDDING/TRENCH DETAIL
NOT TO SCALE

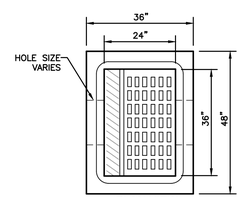

PLAN VIEW

DIMENSIONS (INCHES)		
A (MAX.)	B (I.D.)	C (MIN.)
18	48	25
21	48	28
24	48	31
27	60	34
30	60	38
33	60	41
36	60	44
42	60	50

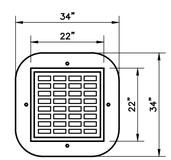

PLAN VIEW

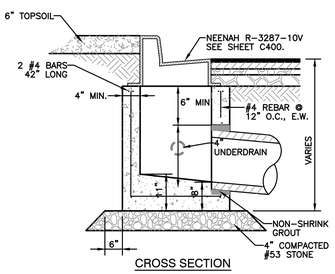

CROSS SECTION

DETAIL 404 - CURB INLET TYPE "J"
NOT TO SCALE

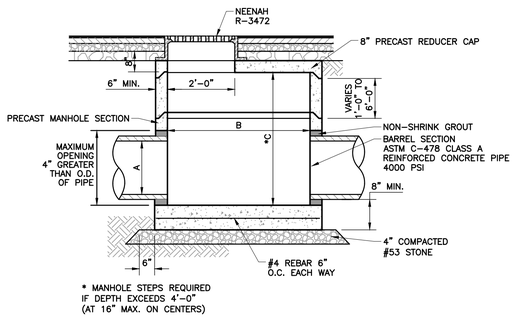

* MANHOLE STEPS REQUIRED IF DEPTH EXCEEDS 4'–0" (AT 16" MAX. ON CENTERS)

DETAIL 403 - PAVEMENT MANHOLE
NOT TO SCALE

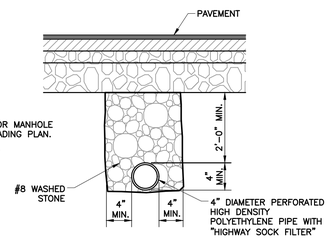

INSTALLATION REQUIRED

1. EXTENDING 20' FROM STORM INLETS OR MANHOLE WHERE SHOWN ON THE UTILITY & GRADING PLAN.
2. PIPE MATERIAL PER INDIANA DEPT. OF TRANSPORTATION SPECS. No. 218.02

DETAIL 405 - 4" PIPE UNDERDRAIN UNDER PAVEMENT
NOT TO SCALE

PRELIMINARY
NOT FOR CONSTRUCTION

Indiana 811
Know what's below. Call before you dig.

NICHOLAS P. JUSTICE
REGISTERED
No. PE11800753
STATE OF INDIANA
PROFESSIONAL ENGINEER
08/09/2022

SUBMITTAL & REVISION RECORD

NO	DATE	DESCRIPTION

Civil & Environmental Consultants, Inc.
530 E. Ohio Street · Suite G · Indianapolis, IN 46204
317-655-7777 · 877-746-0749
www.ceiinc.com

ECHO GREENWOOD, LLC
SMITH VALLEY ROAD RETAIL
SMITH VALLEY & MORGANTOWN ROAD
GREENWOOD, IN

SITE DETAILS

DATE:	AUGUST 9, 2022	DRAWN BY:	JAR
DWG SCALE:	AS NOTED	CHECKED BY:	DRAFT
PROJECT NO:			322-045
APPROVED BY:			DRAFT

DRAWING NO.: C802

P:\320-045\322-045-04001\Dwg\CV01\322045-CV01-C800.dwg(C802) LS:(8/9/2022 - jpedman) - LP: 8/9/2022 2:47 PM

NOTE:
TO BE USED WHEN CLEAR DISTANCE (FROM EXTERIOR PIPE DIAMETER TO EXTERIOR PIPE DIAMETER) BETWEEN SANITARY SEWER PIPING (MAINS, LATERALS, FORCE MAINS, ETC.) AND ALL OTHER PIPES IS 18" OR LESS, PER ENGINEER'S DIRECTION, OR WHERE NOTED ON THE CONSTRUCTION PLANS. A MINIMUM CLEAR DISTANCE OF 3" MUST BE PROVIDED TO MAINTAIN STRUCTURAL INTEGRITY OF THE CONCRETE.

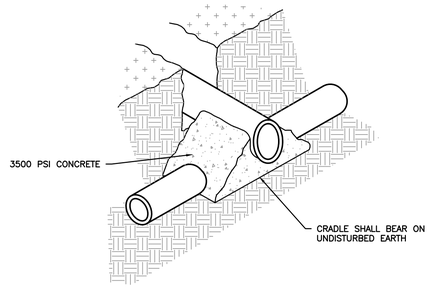

DETAIL 507 - CONCRETE CRADLE DETAIL
NOT TO SCALE

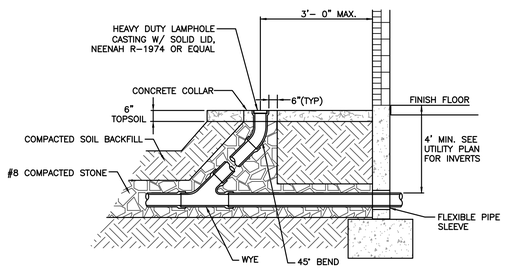

NOTE:
MAXIMUM CLEANOUT SPACING TO BE NO MORE THAN 100 FEET.

DETAIL 506 -CLEANOUT DETAIL
NOT TO SCALE

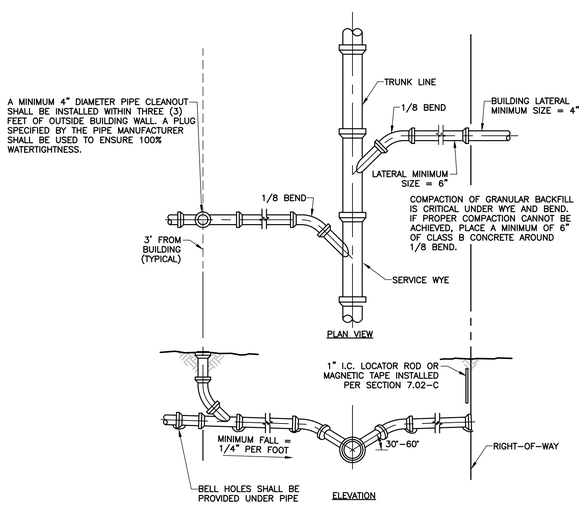

DETAIL 505 - LATERAL DETAIL "A"
(LESS THAN 15' DEEP)
NOT TO SCALE

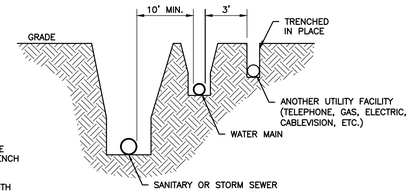

NOTES:
1. WATER MAIN SHALL NOT BE LOCATED IN THE SAME TRENCH AS SANITARY SEWERS.
2. SEPARATION OF 3 FEET WITH ANY UTILITY REQUIRED.

WATER MAIN LAYING PARALLEL TO SEWER

NOTE:
WATER MAIN TO COMPLY WITH LOCAL WATER UTILITY SPECIFICATIONS.

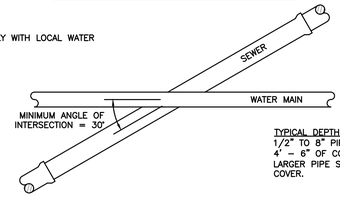

TYPICAL DEPTH OF WATER MAIN
1/2" TO 8" PIPE SHOULD HAVE 4' – 6" OF COVER, 10" AND LARGER PIPE SHOULD HAVE 4' OF COVER.

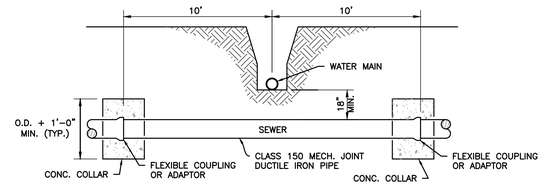

WATER MAIN CROSSING SEWER

DETAIL 504 - SEWER/WATER LINE SEPARATION
NOT TO SCALE

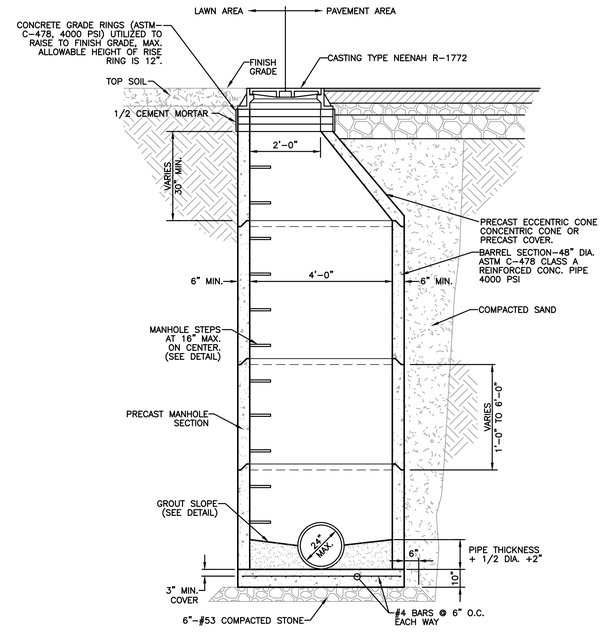

DETAIL 502 - SANITARY MANHOLE TYPE "C"
NOT TO SCALE

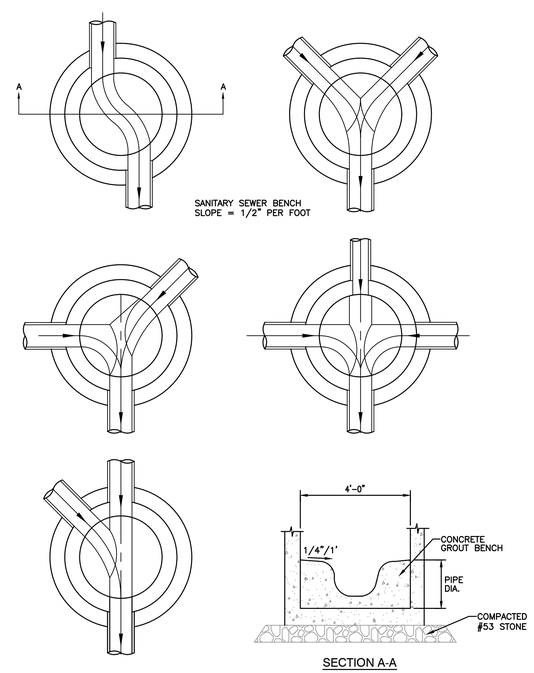

SECTION A-A

DETAIL 503 - STANDARD MANHOLE BENCHES
NOT TO SCALE

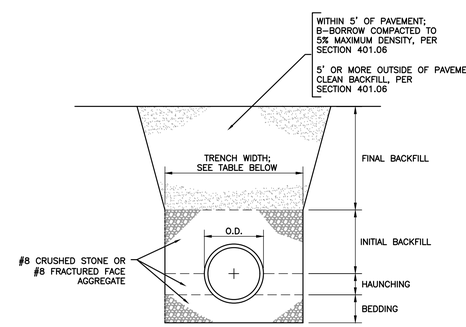

MINIMUM BEDDING, HAUNCHING, AND INITIAL BACKFILL DEPTHS		
PIPE SIZE	BEDDING (BELOW PIPE BARREL)	HAUNCHING AND INITIAL BACKFILL (ABOVE TOP OF PIPE)
UNDER 8"	4" MIN.	4" MIN.
8" to 15"	4" MIN.	12" MIN.
18" & OVER	8" MIN.	12" MIN.

MINIMUM TRENCH WIDTHS	
PIPE SIZE	MINIMUM WIDTH
UP TO 18"	O.D. + 16"
18" & OVER	(O.D. x 1.25) + 12"

DETAIL 501 - FLEXIBLE PIPE BEDDING & BACKFILL REQUIREMENTS
NOT TO SCALE

PRELIMINARY
NOT FOR CONSTRUCTION

Indiana811
Know what's below. Call before you dig.

NICHOLAS P. JUSTICE
REGISTERED
No. PE11800753
STATE OF INDIANA
PROFESSIONAL ENGINEER
08/09/2022

SUBMITTAL & REVISION RECORD

NO	DATE	DESCRIPTION

Civil & Environmental Consultants, Inc.
530 E. Ohio Street · Suite G · Indianapolis, IN 46204
317-655-7777 · 877-746-0749
www.ceiinc.com

ECHO GREENWOOD, LLC
SMITH VALLEY ROAD RETAIL
SMITH VALLEY & MORGANTOWN ROAD
GREENWOOD, IN

SITE DETAILS

DATE:	AUGUST 9, 2022
DRAWN BY:	JAR
DWG SCALE:	AS NOTED
CHECKED BY:	DRAFT
PROJECT NO:	322-045
APPROVED BY:	DRAFT

DRAWING NO.: C803

P:\320-000\322-045\-0400\Dwg\CIVIL\322045-CIVIL-C800.dwg\C803 LS:(8/9/2022 - jhedman) - LP: 8/9/2022 2:47 PM

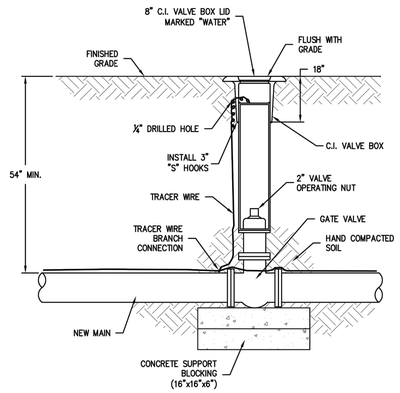

GATE VALVE

SCALE: NONE

TOWN OF BARGERSVILLE, INDIANA APPROVED SEPTEMBER 25, 2018

DETAIL NO. DW–02
DATE: JAN 2015

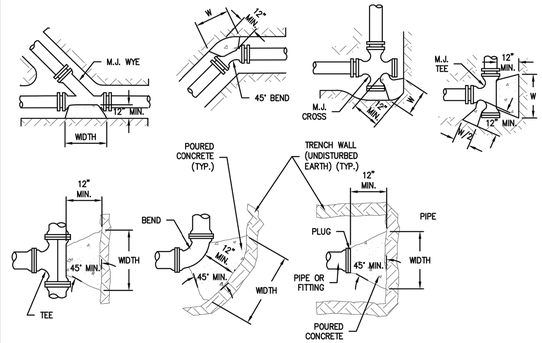

AREA IN SQUARE FEET REQUIRED FOR CONCRETE THRUST BLOCKING					
SIZE	TEE & PLUG	90° BEND	45° BEND	22½° BEND	11¼° BEND
4"	2.0	2.5	1.5	1.0	1.0
6"	4.0	5.5	3.0	1.5	1.0
8"	6.5	9.0	5.0	2.5	1.5
10"	10.0	14.0	7.5	4.0	2.0
12"	14.0	20.0	11.0	5.5	3.0
14"	19.0	27.0	14.5	7.5	4.0
16"	25.0	35.0	19.0	10.0	5.0
18"	31.5	44.5	24.0	12.5	6.5
20"	38.0	54.5	29.5	15.0	7.5
24"	55.5	78.5	42.5	22.0	11.0
30"	55.5	122.0	66.0	34.0	17.0
36"	124.0	175.5	95.0	48.5	24.5
42"	168.0	237.5	128.5	65.5	33.0

NOTES:
1. CONCRETE REACTION BLOCKING SHALL NOT COVER PIPE JOINTS, BOLTS, OR GLANDS.
2. WRAP ALL WATER MAIN SURFACES WITH POLYETHYLENE PRIOR TO PLACEMENT OF CONCRETE.

WATER MAIN REACTION BLOCKING

SCALE: NONE

TOWN OF BARGERSVILLE, INDIANA APPROVED SEPTEMBER 25, 2018

DETAIL NO. DW–06
DATE: JAN 2015

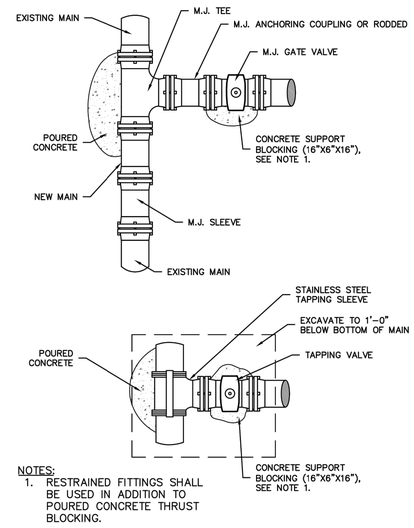

NOTES:
1. RESTRAINED FITTINGS SHALL BE USED IN ADDITION TO POURED CONCRETE THRUST BLOCKING.

MAIN CONNECTION

SCALE: NONE

TOWN OF BARGERSVILLE, INDIANA APPROVED SEPTEMBER 25, 2018

DETAIL NO. DW–18
DATE: JAN 2015

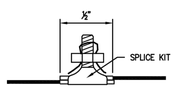

EXISTING CONNECTION

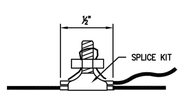

BRANCH CONNECTION

TRACER WIRE BOLTED CONNECTION

SCALE: NONE

TOWN OF BARGERSVILLE, INDIANA APPROVED SEPTEMBER 25, 2018

DETAIL NO. DW–05
DATE: JAN 2015

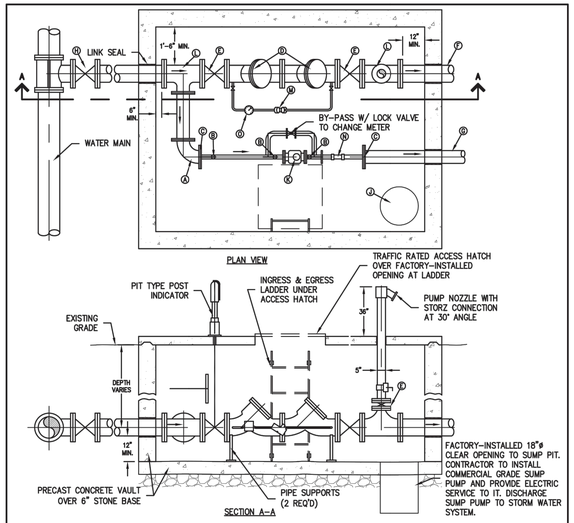

KEYED NOTES:
1. 90° FLANGED BEND w/ PIPE SUPPORT
2. BALL VALVE
3. REDUCING FLANGE
4. DOUBLE DETECTOR CHECK VALVE ASS'Y
5. FLANGED OS & Y VALVE
6. FIRE LINE
7. DOMESTIC SERVICE
8. MECHANICAL JOINT GATE VALVE & BOX
9. TAPPING SLEEVE w/ TAPPING VALVE & BOX
10. SUMP
11. METER – (BY UTILITY)
12. FLANGED TEE
13. DOUBLE CHECK VALVE
14. LOK–PAK
15. PRIVATE METER

NOTES:
1. CONTRACTOR SHALL CONSTRUCT METER VAULT.
2. CONSTRUCTION MATERIALS: PRECAST CONCRETE.
3. INSIDE DIMENSIONS PER DRAWING NOTES. VAULT TO BE SET LENGTHWISE WITH SERVICE.
4. TOP OF VAULT TO BE PRE–CAST CONCRETE, AT LEAST 4" THICK WITH REINFORCING TO SUPPORT AASHTO HS20 TRAFFIC LOAD. TOP OF VAULT SHALL CORRESPOND WITH FINISHED GRADE LEVEL OF SURROUNDING AREA, LEVEL WITH PAVEMENT IF CONSTRUCTED IN PAVED AREA.
5. BOTTOM OF VAULT TO BE PRE–CAST 6" CONCRETE, WITH MINIMUM CLEARANCE OF 12" BELOW BOTTOM OF FIRE/SERVICE LINE.
6. CUSTOMER SHALL FURNISH 2" BALL VALVES ON OUTLET SIDE OF THE 2" METER SETTING.
7. CUSTOMER SHALL FURNISH DOUBLE DETECTOR CHECK VALVE. METER IS FURNISHED BY UTILITY.
8. CUSTOMER SHALL FURNISH VAULT FRAME AND LID TO BE INSTALLED IN TOP OF VAULT BY CUSTOMER (BILCO J–2AL OR 30"x30" ALUMINUM PCM)
9. UTILITY WILL INSTALL DOMESTIC SERVICE METER INTO THE VAULT. COMBINATION SERVICES CAN BE USED AT THE DISCRETION OF THE UTILITY.
10. CUSTOMER SHALL INSTALL A LADDER IN PIT FOR INGRESS AND EGRESS.
11. A 2" TEST PLUG SHALL BE INSTALLED AT LEAST 2 PIPE DIAMETERS DOWNSTREAM OF 2" OR LARGER METERS.
12. USED FOR LEAK DETECTION METER IS FOR FIRE LINE ONLY.

COMBINED FIRE SERVICE & METER VAULT

SCALE: NONE

TOWN OF BARGERSVILLE, INDIANA APPROVED JANUARY 2, 2019

DETAIL NO. DW–10
DATE: JAN 2015
REV DATE: JAN 2019

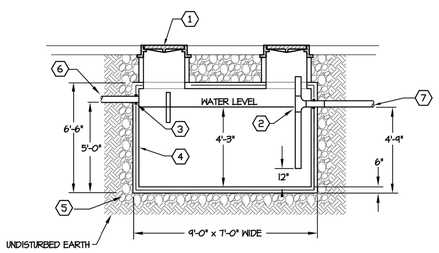

CODED NOTES:
1. 24" DIA. RISER WITH GAS TIGHT HEAVY DUTY, GASKETED, BOLT ON LID, EAST JORDAN IRON WORKS NO. 1771.
2. 4"x 4"x 4" C.I., 90 DEGREE SANITARY TEE.
3. "A-LOK" MANHOLE TYPE CONNECTORS OR KORBAND TYPE.
4. PRECAST TRAFFIC BEARINGS (HS-20) CONCRETE TANK, MACK INDUSTRIES OR EQUAL.
5. BACKFILL WITH GRAVEL TO SUB GRADE.
6. INLET - 4"
7. OUTLET - 4"

NOTE:
ALL JOINTS SHALL BE SEALED WATER TIGHT.
1500 GALLON CAPACITY.

EXTERIOR GREASE INTERCEPTOR DETAIL

REF.	SC1	ST6 SC1B
SCALE	NONE	
DATE		

PRELIMINARY
NOT FOR CONSTRUCTION

Indiana 811
Know what's below. Call before you dig.

NICHOLAS P. JUNGLAS
REGISTERED
No. PE11800753
STATE OF INDIANA
PROFESSIONAL ENGINEER
08/09/2022

SUBMITTAL & REVISION RECORD

NO	DATE	DESCRIPTION

Civil & Environmental Consultants, Inc.
530 E. Ohio Street · Suite G · Indianapolis, IN 46204
317-655-7777 · 877-746-0749
www.ceiinc.com

ECHO GREENWOOD, LLC
SMITH VALLEY ROAD RETAIL
SMITH VALLEY & MORGANTOWN ROAD
GREENWOOD, IN

SITE DETAILS

DATE:	AUGUST 9, 2022	DRAWN BY:	JAR
DWG SCALE:	AS NOTED	CHECKED BY:	DRAFT
PROJECT NO:			322-045
APPROVED BY:			DRAFT

DRAWING NO.: C804

P:\320-000\322-045\-DWG\Dwg\CIVIL\322045-CIVIL-C800.dwg[C804] LS:(8/9/2022 - jwemen) - LP: 8/9/2022 2:47 PM

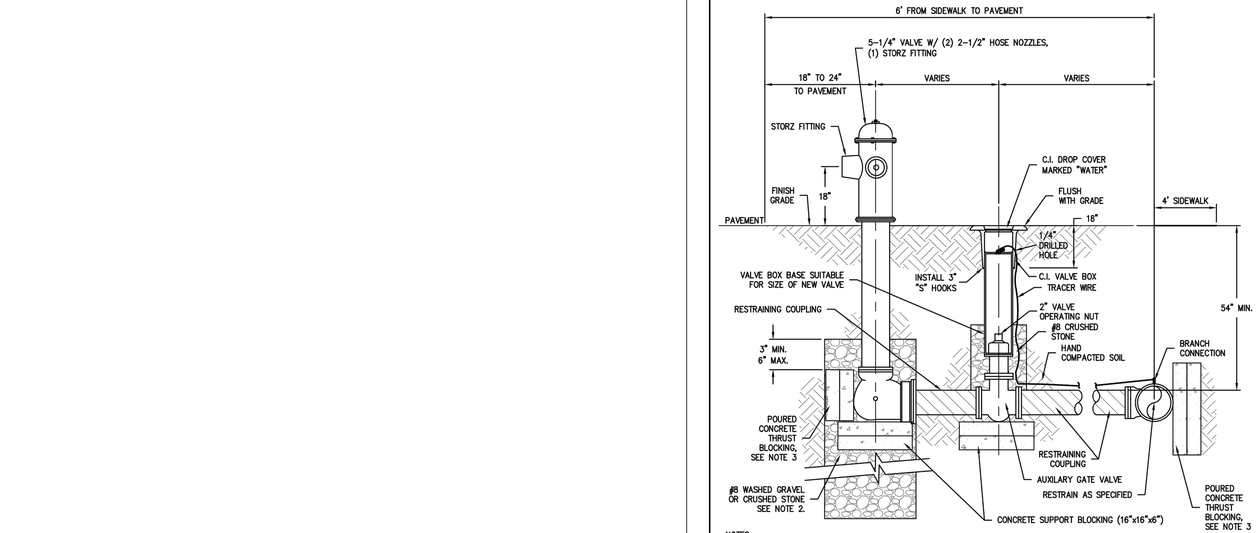

NOTES:
1. SET HYDRANT & VALVE ON CONCRETE SUPPORT BLOCKING.
2. PLACE 2'x3' DEEP DRAINAGE PIT, EXTEND A MINIMUM OF 3", AND MAXIMUM OF 6", ABOVE HYDRANT BOOT.
3. RESTRAINED FITTINGS SHALL BE USED IN ADDITION TO CONCRETE THRUST BLOCKING. RESTRAINTS MUST BE USED FROM THE DISTRIBUTION MAIN TO THE HYDRANT. PLACE CONCRETE BLOCKS BEHIND HYDRANT TO UNDISTURBED EARTH.
4. VALVE BOX SHALL BE CENTERED AND PLUMB OVER VALVE OPERATING NUT.
5. INSTALL HYDRANT LOCATED ON 6" AND LARGER MAINS, OR COUNTY ROADS AT LOCATIONS AS APPROVED BY THE UTILITY.
6. SWIVEL 90° BEND MAY BE USED TO INSTALL THE HYDRANT AND VALVE IN THE GRASS STRIP BETWEEN CURB AND SIDEWALK WITH THE STORZ FITTING FACING THE ROADWAY.
6. ALL VALVES SHALL HAVE POSI-CAPS.
7. PROVIDE RED PRIVATE HYDRANTS.
8. PROVIDE YELLOW PUBLIC HYDRANTS WITH GLOSS BLACK CAPS.

HYDRANT ASSEMBLY

SCALE: NONE

DETAIL NO. DW-04
DATE: JAN 2015
REV DATE: OCT 2016

TOWN OF BARGERSVILLE, INDIANA APPROVED SEPTEMBER 25, 2018

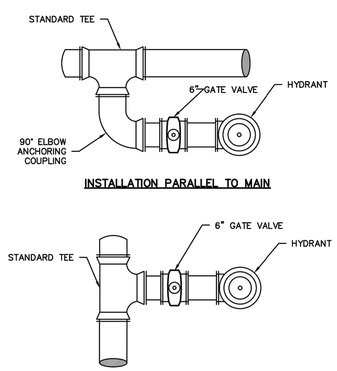

INSTALLATION PARALLEL TO MAIN

INSTALLATION PERPENDICULAR TO MAIN

NOTE:
1. ALL TEES MUST HAVE POURED THRUST BLOCKS. (SEE APPLICABLE DETAILS).

HYDRANT CONNECTION

SCALE: NONE

DETAIL NO. DW-17
DATE: JAN 2015

TOWN OF BARGERSVILLE, INDIANA APPROVED SEPTEMBER 25, 2018

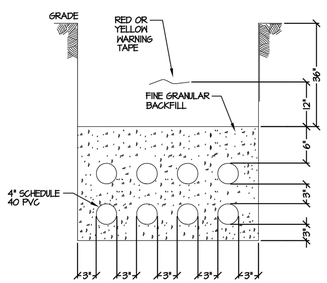

NOTE:
ALL UNDERGROUND CONDUIT WITHIN 5'-0" ON EITHER SIDE OF FOUNDATION WALL (INCLUDING ELBOWS) IS TO BE RIGID STEEL.

TRANFORMER DUCT BANK SECTION (A)	
REF.	SC1
SCALE	NO SCALE
DATE	

ST1 / SC1B

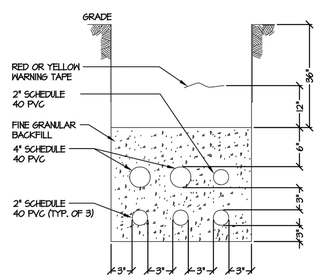

NOTE:
ALL UNDERGROUND CONDUIT WITHIN 5'-0" ON EITHER SIDE OF FOUNDATION WALL (INCLUDING ELBOWS) IS TO BE RIGID STEEL.

GENERATOR DUCT BANK SECTION (B)	
REF.	SC1
SCALE	NONE
DATE	

ST2 / SC1B

PRELIMINARY
NOT FOR CONSTRUCTION

Indiana811
Know what's **below.** **Call** before you dig.

NICHOLAS P. JULLIE REGISTERED No. PE11800753 STATE OF INDIANA PROFESSIONAL ENGINEER
08/09/2022

SUBMITTAL & REVISION RECORD

NO	DATE	DESCRIPTION

CEC
Civil & Environmental Consultants, Inc.
530 E. Ohio Street · Suite G · Indianapolis, IN 46204
317-655-7777 · 877-746-0749
www.cecinc.com

ECHO GREENWOOD, LLC
SMITH VALLEY ROAD RETAIL
SMITH VALLEY & MORGANTOWN ROAD
GREENWOOD, IN

322045-CV01-C800 - C805

DATE:	AUGUST 9, 2022
DRAWN BY:	JAR
DWG SCALE:	AS NOTED
CHECKED BY:	DRAFT
PROJECT NO:	322-045
APPROVED BY:	DRAFT

DRAWING NO.:
C805

P:\320-000\322-045\-CADD\Dwg\CV01\322045-CV01-C800.dwg[C805] LS:(9/9/2022 - jmoreno) - LP: 8/9/2022 2:47 PM

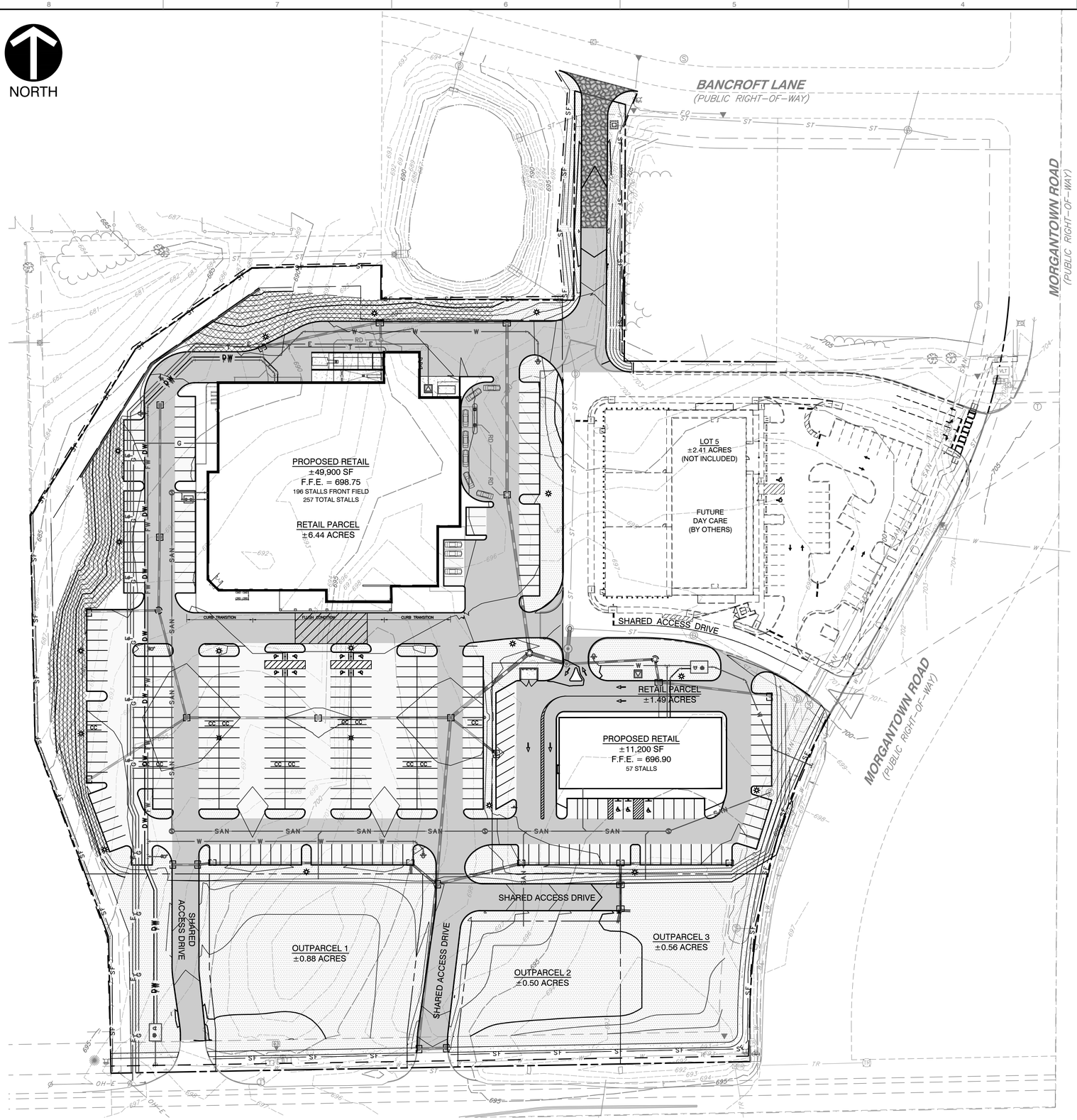

PLAN INDEX

ASSESSMENT OF CONSTRUCTION PLAN ELEMENTS

A1	PLAN INDEX – SHEET C900
A2	11"X17" PLAN – SEPARATE DOCUMENT
A3	PROJECT NARRATIVE – SHEET C901
A4	VICINITY MAP – SHEET C000
A5	LEGAL DESCRIPTION – NA
A6	LOTS AND IMPROVEMENTS – SHEET C200
A7	HUC – C901
A8	STATE AND FEDERAL WQ PERMITS – NA
A9	STORM WATER DISCHARGE POINTS – C300
A10	WETLANDS, LAKES AND WATER COURSES – NA
A11	RECEIVING WATER DESCRIPTION – C901
A12	POTENTIAL GROUND WATER DISCHARGE – C901
A13	100 FLOOD DELINEATION – C901
A14	PRE/POST STORM WATER DISCHARGE RATES – C901
A15	ADJACENT LAND USE – C901
A16	DISTURBED AREA DELINEATION – C200, C900, C900A
A17	EXISTING GROUND COVER – SITE SURVEY
A18	SOIL MAP AND DESCRIPTION – C900
A19	PROPOSED STORM WATER SYSTEMS – C400
A20	OFF-SITE CONSTRUCTION ACTIVITIES – NA
A21	SOIL STOCKPILE/BORROW AREAS – NA
A22	EXISTING SITE TOPOGRAPHY – C300

STORM WATER POLLUTION PREVENTION – DURING CONSTRUCTION

B1	POTENTIAL POLLUTION SOURCES – C901
B2	SEQUENCE OF STORM WATER QUALITY MEASURES – C901
B3	CONSTRUCTION ENTRANCE – C900
B4	SEDIMENT CONTROL MEASURES FOR SHEET FLOW – C900
B5	SEDIMENT CONTROL MEASURES FOR CONCENTRATED FLOW – C900
B6	STORM SEWER INLET PROTECTION – C900
B7	RUNOFF CONTROL MEASURES – C900, C900A
B8	STORM WATER OUTLET PROTECTION – C900
B9	GRADE STABILIZATION STRUCTURES – C900
B10	STORM WATER QUALITY DETAILS – C902
B11	TEMPORARY STABILIZATION – C902
B12	PERMANENT STABILIZATION – C900, C900A
B13	MATERIAL HANDLING AND SPILL PREVENTION – C901
B14	MONITORING AND MAINTENANCE GUIDELINES – C901
B15	INDIVIDUAL LOT ESCP – NA

STORM WATER POLLUTION PREVENTION – POST CONSTRUCTION

C1	POTENTIAL POLLUTANTS AND SOURCES – C901
C2	POST CONSTRUCTION STORM WATER QUALITY MEASURE IMPLEMENTATION – C901
C3	POST CONSTRUCTION STORM WATER QUALITY MEASURES – C901
C4	POST CONSTRUCTION STORM WATER QUALITY MEASURE DETAILS – C901
C5	POST CONSTRUCTION STORM WATER QUALITY MEASURE MAINTENANCE – C901

BENCHMARKS:

UNLESS OTHERWISE NOTED, ELEVATIONS SHOWN HEREON ARE BASED UPON AN OPUS SOLUTION AND ARE ON THE 1988 NORTH AMERICAN VERTICAL DATUM (NAVD88). IT IS MY OPINION THAT THE UNCERTAINTY IN THE ELEVATION OF THE PROJECT BENCHMARK DOES NOT EXCEED 0.10 FOOT.

TBM#1: CUT SQUARE ON THE WEST SIDE OF A CONCRETE LID OF A FORCE MAIN MANHOLE ON THE EAST SIDE OF MORGANTOWN ROAD ACROSS FROM THE NORTHERN MOST CURB CUT ENTRANCE TO THE SITE.
ELEV. = 706.84

TBM#2: CUT "X" ON THE ARROW BOLT OF A HYDRANT LOCATED IN THE NORTHWEST QUADRANT OF THE INTERSECTION OF MORGANTOWN AND SMITH VALLEY ROAD.
ELEV. = 695.82

TBM#3: CUT "X" ON THE ARROW BOLT OF A HYDRANT LOCATED IN THE SOUTHWEST CORNER OF THE SITE.
ELEV. = 699.89

UTILITY NOTE:

THE UNDERGROUND UTILITIES SHOWN HAVE BEEN LOCATED FROM FIELD SURVEY INFORMATION AND EXISTING DRAWINGS. THE SURVEYOR MAKES NO GUARANTEES THAT THE UNDERGROUND UTILITIES COMPRISE ALL SUCH UTILITIES IN THE AREA, EITHER IN-SERVICE OR ABANDONED. THE SURVEYOR FURTHER DOES NOT WARRANT THAT THE UNDERGROUND UTILITIES SHOWN ARE IN THE EXACT LOCATION INDICATED ALTHOUGH THE SURVEYOR DOES CERTIFY THAT THEY ARE LOCATED AS ACCURATELY AS POSSIBLE FROM INFORMATION AVAILABLE. THE SURVEYOR HAS NOT PHYSICALLY LOCATED THE UNDERGROUND UTILITIES. INDIANA 811 ONE-CALL PUBLIC UTILITY LOCATE SERVICE TICKET NUMBERS 2204292249, 2204292299, AND 2204292346 WERE ISSUED FOR THIS SITE.

PRIOR TO ANY EXCAVATION FOR UNDERGROUND UTILITIES, THE CONTRACTOR SHALL EXPOSE AND VERIFY LOCATIONS (HORIZONTAL AND VERTICAL) OF ALL EXISTING UTILITIES INCLUDING BUT NOT LIMITED TO GAS, WATER, AND SANITARY SEWER. ANY CONFLICTS SHALL BE REPORTED IMMEDIATELY TO THE ENGINEER AND THE APPROPRIATE AUTHORITIES.

SOIL LEGEND

YfhC2–Fox–Urban land complex
YfhB2–Fox loam–Urban land complex
YobB2–Ockley loam–Urban land complex

SOIL MAPS FROM THE UNITED STATES DEPARTMENT OF AGRICULTURE, SOIL CONSERVATION SERVICE

SOIL DESCRIPTION

YfhC2 – Fox–Urban land complex, 6–12 percent slopes, is a well drained and medium runoff soil. The surface layer is loam. Permeability is moderately high to high (0.60 to 2.00 in/hr) in the most restrictive layer greater than 80 inches below the surface. Available water supply is 0 to 60 inches, Low (about 5.3 inches).
YfhB2 – Fox loam–Urban land complex, 2 to 6 percent slopes, is a well drained and low runoff soil. The surface layer is loam. Permeability is moderately high to high (0.60 to 2.00 in/hr) in the most restrictive layer greater than 80 inches below the surface. Available water supply is 0 to 60 inches, Low (about 4.9 inches).
YobB2 – Ockley loam–Urban land complex, 2 to 6 percent slopes, is a well drained and low runoff soil. The surface layer is loam. Permeability is moderately high to high (0.60 to 2.00 in/hr) in the most restrictive layer greater than 80 inches below the surface. Available water supply is 0 to 60 inches, Moderate (about 8.2 inches).
All areas covered by Trees/Timber (Woody Vegetation).

GENERAL EROSION CONTROL NOTES

1. CONTRACTOR SHALL INSTALL ALL REQUIRED SILT FENCES, SILT TRAPS, TREE PROTECTION AND INLET PROTECTION FOR EXISTING INLETS PRIOR TO THE START OF ANY EARTH MOVING OR STRIPPING.
2. CONTRACTOR SHALL INSTALL A STONE CONSTRUCTION ENTRANCE OR SOME OTHER DEVICE PRIOR TO THE START OF EARTHWORK AS NECESSARY TO PREVENT SOIL FROM BEING TRACKED OR WASHED INTO EXISTING ROADWAYS.
3. LAND ALTERATIONS WHICH STRIP THE LAND OF VEGETATION, INCLUDING REGRADING, SHALL BE DONE IN A WAY THAT WILL MINIMIZE EROSION. WHENEVER FEASIBLE, NATURAL VEGETATION SHALL BE RETAINED AND PROTECTED. AS GRADING IS DONE, INSTALL SILT TRAPS, SILT FENCES, SLOPE DRAINS, TEMPORARY DIVERSIONS AND OTHER RUNOFF CONTROL MEASURES AT APPROPRIATE LOCATIONS TO KEEP SEDIMENT CONTAINED ON SITE.
4. ALL DISTURBED AREAS SHALL BE SEEDED AND STRAW MULCHED AS SHOWN ON THE PLANS IMMEDIATELY AFTER COMPLETION OF GROUND ACTIVITY.
5. PERMANENT AND FINAL VEGETATION OR STRUCTURAL EROSION CONTROL DEVICES SHALL BE INSTALLED AS SOON AS PRACTICAL UNDER THE CIRCUMSTANCES.
6. THE DURATION OF TIME IN WHICH AN AREA REMAINS EXPOSED SHALL BE KEPT TO A PRACTICAL MINIMUM DEPENDING UPON THE WEATHER. IF CONSTRUCTION ACTIVITY IS TO CEASE FOR MORE THAN TWO WEEKS, THE DISTURBED AREAS SHALL BE TEMPORARILY SEEDED.
7. ALL STORM SEWER INLET PROTECTION DEVICES SHALL BE PUT IN PLACE AT THE TIME EACH INLET IS CONSTRUCTED.
8. THE CONTRACTOR SHALL MAINTAIN EROSION CONTROL MEASURES AND DEVICES DURING CONSTRUCTION AND UNTIL SILTATION OF THE STREETS AND STORM SEWERS WILL NO LONGER OCCUR.
9. ONCE ONSITE EROSION AND SILTATION OF THE STREETS AND STORM SEWERS WILL NO LONGER OCCUR, THE CONTRACTOR SHALL REMOVE AND DISPOSE OF THE TEMPORARY EROSION CONTROL DEVICES.
10. THESE GENERAL PROCEDURES MAY NOT COVER ALL SITUATIONS. REFER TO EROSION CONTROL PLANS FOR SPECIFIC NOTES AND ADDITIONAL DETAILS
11. EROSION CONTROL TO COMPLY WITH INDIANA 327 IAC AND RULE #5, AND CURRENT IDEM INDIANA STORMWATER QUALITY MANUAL.
12. ADDITIONAL EROSION CONTROL MEASURES MAY BE REQUIRED BY THE INSPECTOR IN THE FIELD.

JOHNSON COUNTY PLANNING AND ZONING EROSION CONTROL NOTES

1. ALL EROSION CONTROL MEASURES SHALL BE IN ACCORDANCE WITH THE CURRENT INDIANA STORM WATER QUALITY MANUAL – PLANNING AND SPECIFICATION GUIDE FOR EFFECTIVE EROSION CONTROL AND POST-CONSTRUCTION WATER QUALITY (IDEM INDIANA WATER QUALITY MANUAL, LATEST ADDITION)
2. SEDIMENT AND EROSION CONTROL MEASURES MUST BE APPROVED BY COUNTY OR LOCAL JURISDICTIONAL AGENCY PRIOR TO THE START OF CONSTRUCTION
3. SILT FENCE MATERIAL SHALL BE NWSF-6 NON-WOVEN FABRIC OR AN APPROVED EQUAL.
4. CONTRACTOR/PERMIT HOLDER WILL SCHEDULE AN ON-SITE PRE-CONSTRUCTION MEETINH WITH THE JOHNSON COUNTY MS4 COMPLIANCE AND ENFORCEMENT INSPECTOR..
5. PRIOR TO ANY DEWATERING ACTIVITIES, CONTRACTOR/PERMIT HOLDER SHALL MEET WITH THE JOHNSON COUNTY MS4 COMPLIANCE AND ENFORCEMENT INSPECTOR.
6. IF ANY EXPORT OF SOIL MATERIALS SHALL OCCUR, A MODIFICATION OF THE SWPPP IS REQUIRED.
7. ALL SITES MUST PLACE A CONTRACTOR/PERMIT HOLDER DISPLAY BOARD WHERE THE RULE 5 NOI PERMIT AND SWPPP PERMIT MUST BE DISPLAYED. IF PLACEMENT OF DISPLAY BOARD IS WAIVED FOR AN INDIVIDUAL RESIDENTIAL LOT, NOI AND SWPPP PERMITS MUST BE DISPLAYED ON THE STRUCTURE.
8. STATE AND COUNTY OFFICIAL CAN REQUIRE ADDITIONAL EROSION CONTROL MEASURES IN THE FIELD AS SITE CONDITIONS WARRANT.
9. STATE AND COUNTY OFFICIALS MAY ENTER A CONSTRUCTION SITE FOR EXAMINATION OF THE SWPPP LOG TO ENSURE EROSION CONTROL MEASURES ARE BEING ADEQUATELY MAINTAINED AFTER RAINFALL EVENTS.
10. CONCRETE WASTEWATER SHALL BE DISCHARGED INTO AND APPROVED ON-SITE CONTAINMENT UNIT. SUCH WASTEWATER SHALL BE RETAINED ON-SITE UNTIL WASTEWATER HAS SOLIDIFIED (24-48 HOURS).
11. POST-CONSTRUCTION PAVEMENT INLET PROTECTION SHALL BE INSTALLED PRIOR TO THE COMPLETION AND FINAL INSPECTION/APPROVAL OF ANY PROJECT.
12. IF CONNECTING TO AN EXISTING STORM SEWER STRUCTURE, THE STRUCTURE MUST BE CORE-DRILLED.

PROPOSED LEGEND:

- PROPOSED CONSTRUCTION ENTRANCE
- EROSION CONTROL BLANKET OVER SEED OVER 4" LAYER OF COMPACTED TOPSOIL
- PERMANENT/TEMPORARY SEEDING AREAS OVER 4" LAYER OF COMPACTED TOPSOIL
- PROPOSED LIMITS OF DISTRUBANCE
- SF — PROPOSED SILT FENCE
- PROPOSED INLET PROTECTION
- PROPOSED CONCRETE WASHOUT

SCALE IN FEET
0 50' 100'

PRELIMINARY
NOT FOR CONSTRUCTION

Indiana 811
Know what's below. Call before you dig.

NICHOLAS P. JULIAN
REGISTERED
No. PE11800753
STATE OF INDIANA
PROFESSIONAL ENGINEER
08/09/2022

SUBMITTAL & REVISION RECORD

NO	DATE	DESCRIPTION

Civil & Environmental Consultants, Inc.
530 E. Ohio Street · Suite G · Indianapolis, IN 46204
317-655-7777 · 877-746-0749
www.cecinc.com

ECHO GREENWOOD, LLC
SMITH VALLEY ROAD RETAIL
SMITH VALLEY & MORGANTOWN ROAD
GREENWOOD, IN

OVERALL STORMWATER POLLUTION PREVENTION PLAN

DATE:	AUGUST 9, 2022	DRAWN BY:	JAR
DWG SCALE:	1" = 50'	CHECKED BY:	DRAFT
PROJECT NO:			322-045
APPROVED BY:			DRAFT

DRAWING NO.: C900

P:\320-050\322-045\-CADD\Dwg\CVP\322045-CV01-C900.dwg\C900\ LS:(8/9/2022 - pwilmot) - LP: 8/9/2022 2:47 PM

NORTH

BANCROFT LANE
(PUBLIC RIGHT-OF-WAY)

POND

PROPOSED RETAIL
±49,900 SF
F.F.E. = 698.75
196 STALLS FRONT FIELD
257 TOTAL STALLS

RETAIL PARCEL
±6.44 ACRES

LOT 5
±2.41 ACRES
(NOT INCLUDED)

FUTURE
DAY CARE
(BY OTHERS)

CURB TRANSITION | FLUSH CONDITION | CURB TRANSITION

SHARED ACCESS DRIVE

MATCHLINE - SEE SHEET C902

REFERENCE:

1. SEE DRAWING C900 FOR GENERAL NOTES AND SHEET SPECIFIC NOTES.
2. CONTRACTOR SHALL REFER TO OTHER PLANS WITHIN THIS CONSTRUCTION SET FOR OTHER PERTINENT INFORMATION. IT IS NOT THE ENGINEER'S INTENT THAT ANY SINGLE PLAN SHEET IN THIS SET OF DOCUMENTS FULLY DEPICT ALL WORK ASSOCIATED WITH THE PROJECT.

PROPOSED LEGEND:

- PROPOSED CONSTRUCTION ENTRANCE
- EROSION CONTROL BLANKET OVER SEED OVER 4" LAYER OF COMPACTED TOPSOIL
- PERMANENT/TEMPORARY SEEDING AREAS OVER 4" LAYER OF COMPACTED TOPSOIL
- PROPOSED LIMITS OF DISTRUBANCE
- SF — PROPOSED SILT FENCE
- PROPOSED INLET PROTECTION
- PROPOSED CONCRETE WASHOUT

KEY NOTES

- (A) CONSTRUCTION ENTRANCE; SEE DETAIL ON SHEET C904.
- (B) CONCRETE WASHOUT; SEE DETAIL ON SHEET C904.
- (C) EROSION CONTROL BLANKET; SEE DETAIL ON SHEET C904.
- (D) SEEDING AREAS
- (E) SILT FENCE; SEE DETAIL ON SHEET C904.
- (F) INLET PROTECTION; SEE DETAIL ON SHEET C904.

SCALE IN FEET
0 30' 60'

PRELIMINARY
NOT FOR CONSTRUCTION

Indiana811
Know what's below. Call before you dig.

NICHOLAS P. JUSTICE
REGISTERED
No. PE11800753
STATE OF INDIANA
PROFESSIONAL ENGINEER
08/09/2022

SUBMITTAL & REVISION RECORD

NO	DATE	DESCRIPTION

Civil & Environmental Consultants, Inc.
530 E. Ohio Street · Suite G · Indianapolis, IN 46204
317-655-7777 · 877-746-0749
www.ceiinc.com

ECHO GREENWOOD, LLC
SMITH VALLEY ROAD RETAIL
SMITH VALLEY & MORGANTOWN ROAD
GREENWOOD, IN

STORMWATER POLLUTION PREVENTION PLAN

DATE:	AUGUST 9, 2022
DRAWN BY:	JAR
DWG SCALE:	1" = 30'
CHECKED BY:	DRAFT
PROJECT NO:	322-045
APPROVED BY:	DRAFT

DRAWING NO.: C901

F:\320-005\322-045\-CADD\Dwg\C901\322045-C901-C905.dwg(C901) LS:(8/9/2022 - jhelmuth) - LP: 8/9/2022 2:49 PM

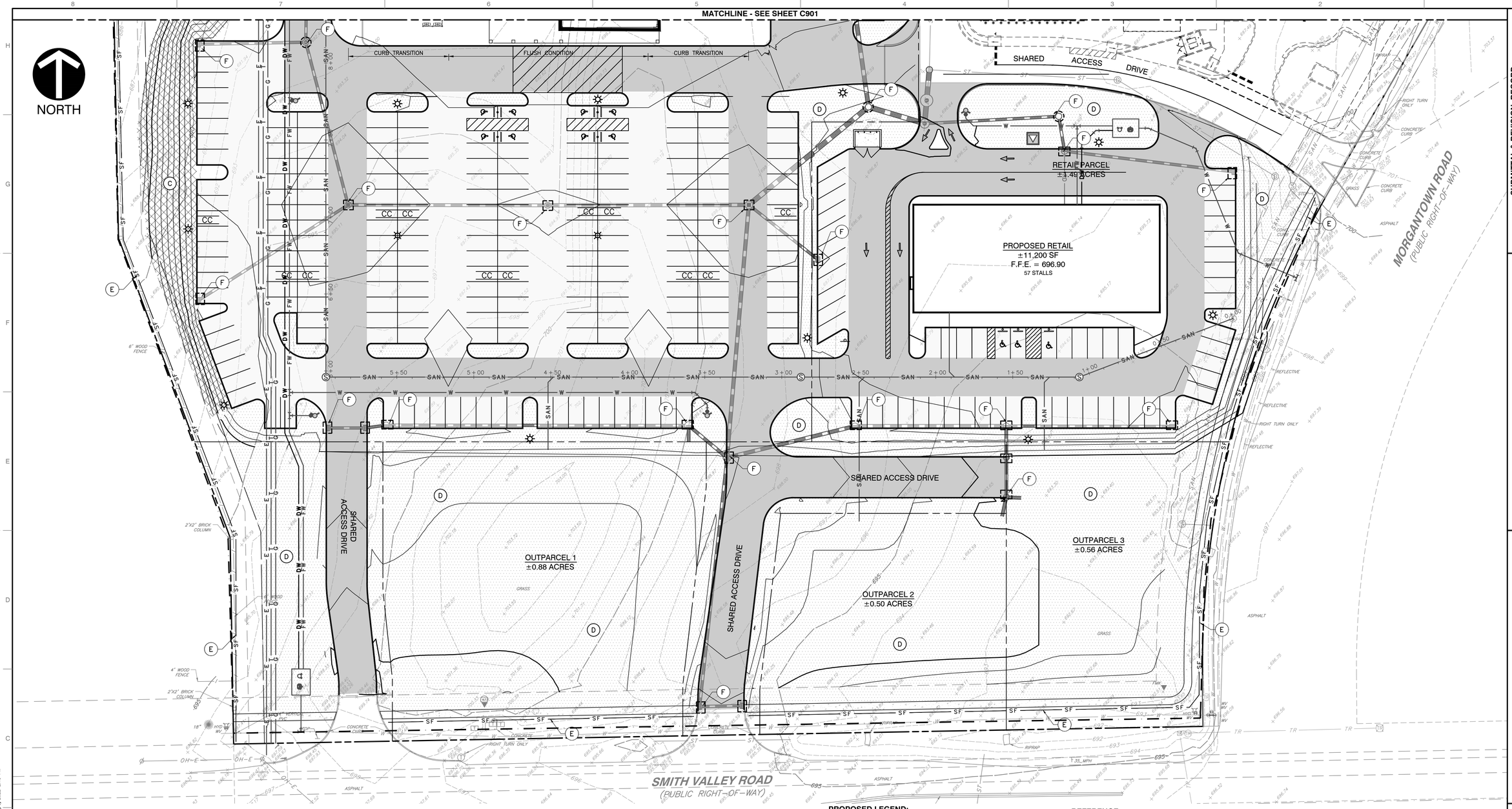

PROPOSED LEGEND:

- PROPOSED CONSTRUCTION ENTRANCE
- EROSION CONTROL BLANKET OVER SEED OVER 4" LAYER OF COMPACTED TOPSOIL
- PERMANENT/TEMPORARY SEEDING AREAS OVER 4" LAYER OF COMPACTED TOPSOIL
- PROPOSED LIMITS OF DISTRUBANCE
- SF — PROPOSED SILT FENCE
- PROPOSED INLET PROTECTION
- PROPOSED CONCRETE WASHOUT

KEY NOTES

- (A) CONSTRUCTION ENTRANCE; SEE DETAIL ON SHEET C904.
- (B) CONCRETE WASHOUT; SEE DETAIL ON SHEET C904.
- (C) EROSION CONTROL BLANKET; SEE DETAIL ON SHEET C904.
- (D) SEEDING AREAS
- (E) SILT FENCE; SEE DETAIL ON SHEET C904.
- (F) INLET PROTECTION; SEE DETAIL ON SHEET C904.

REFERENCE:

1. SEE DRAWING C900 FOR GENERAL NOTES AND SHEET SPECIFIC NOTES.
2. CONTRACTOR SHALL REFER TO OTHER PLANS WITHIN THIS CONSTRUCTION SET FOR OTHER PERTINENT INFORMATION. IT IS NOT THE ENGINEER'S INTENT THAT ANY SINGLE PLAN SHEET IN THIS SET OF DOCUMENTS FULLY DEPICT ALL WORK ASSOCIATED WITH THE PROJECT.

SCALE IN FEET
0 30' 60'

PRELIMINARY
NOT FOR CONSTRUCTION

Indiana 811
Know what's below. Call before you dig.

NICHOLAS P. JUSTICE
REGISTERED
No. PE11800753
STATE OF INDIANA
PROFESSIONAL ENGINEER
08/09/2022

SUBMITTAL & REVISION RECORD

NO	DATE	DESCRIPTION

Civil & Environmental Consultants, Inc.
530 E. Ohio Street · Suite G · Indianapolis, IN 46204
317-655-7777 · 877-746-0749
www.ceiinc.com

ECHO GREENWOOD, LLC
SMITH VALLEY ROAD RETAIL
SMITH VALLEY & MORGANTOWN ROAD
GREENWOOD, IN

STORMWATER POLLUTION PREVENTION PLAN

DATE:	AUGUST 9, 2022
DRAWN BY:	JAR
DWG SCALE:	1" = 30'
CHECKED BY:	DRAFT
PROJECT NO:	322-045
APPROVED BY:	DRAFT

DRAWING NO.: C902

P:\320-000\322-045\-0400\Dwg\C901\322045-C901-C900.dwg(C902) LS:(8/9/2022 - jradman) - LP: 8/9/2022 2:48 PM

ASSESSMENT OF CONSTRUCTION PLAN ELEMENTS (SECTION A)

(A1) INDEX OF THE LOCATION OF THE REQUIRED PLAN ELEMENTS IN THE CONSTRUCTION PLAN

THE PROPOSED EROSION CONTROL MEASURES CAN BE FOUND ON SHEET C901–C902. THE CORRESPONDING EROSION CONTROL DETAILS ARE SHOWN ON C904. THE REQUIRED EROSION CONTROL CHECKLIST ITEMS ARE LISTED ON THIS SHEET.

(A2) A VICINITY MAP DEPICTING THE PROJECTS SITE LOCATION

THE VICINITY MAP SHOWING THE PROJECT LOCATION CAN BE SEEN ON COVER SHEET.

(A3) NARRATIVE OF THE NATURE AND PURPOSE OF THE PROJECT

THIS PROJECT CONSISTS OF A NEW GROCERY STORE, RETAIL BUILDING, AND 3 OUTPARCEL LOTS.

(A4) LATITUDE AND LONGITUDE TO THE NEAREST FIFTEEN (15) SECONDS

LONGITUDE: 86° W 11' 54" LATITUDE: 39° N 36' 24"

(A5) LEGAL DESCRIPTION

NO LEGAL DESCRIPTION PROVIDED BY SITE SURVEYOR.

TOWNSHIP: 13 N RANGE: 3 E SECTION: 33

(A6) 11X17-INCH PLAT SHOWING BUILDING LOT NUMBERS/BOUNDARIES AND ROAD LAYOUT/NAMES

PLEASE REFER TO SHEET C200, SITE LAYOUT PLAN INCLUDED WITH THE SUBMITTAL.

(A7) BOUNDARIS OF THE ONE HUNDRED (100) YEAR FLOODPLAINS, FLOODWAY FRINGES, AND FLOODWAYS

THE PROJECT DOES NOT LIE WITHIN A 100 YEAR FLOODPLAIN AND/ OR THE FLOODWAY AREA.

(A8) LAND USE OF ALL ADJACENT PROPERTIES

THE EXISTING LAND USES ADJACENT TO THE SITE ARE AS FOLLOWS:

NORTH: COMMERCIAL
WEST: COMMERCIAL
SOUTH: COMMERCIAL
EAST: COMMERCIAL

(A9) IDENTIFICATION OF A U.S. EPA APPROVED OR ESTABLISHED TMDL (TOTAL MAXIMUM DAILY LOAD)

TDML: NOT APPLICABLE.

POLLUTANTS: NOT APPLICABLE.

(A10) NAME(S) OF THE RECIEVING WATER(S)

DISCHARGES INTO THE EXISTING DETENTION POND NORTH OF THE SITE THEN ULTIMATELY DISCHARGES INTO THE EXISTING DITCH NORTH OF THE SITE.

(A11) IDENTIFICATION OF DISCHARGES TO A WATER ON THE CURRENT 303(d) LIST OF IMPARED WATERS AND THE POLLUTANT(S) FOR WHICH IT IS IMPARED

THERE ARE NO WATERS CURRENTLY ON THE 303(d) LIST OF IMPARED WATERS THAT ARE RECEIVING DIRECT DISCHARGES FROM THIS SITE.

(A12) SOIL MAP OF THE PREDOMINATE SOIL TYPES

REFER TO SHEET C900.

(A13) IDENTIFICATION AND LOCATIONOF ALL KNOWN WETLANDS, LAKES, AND WATER COURSES ON OR ADJACENT TO THE PROJECT SITE (CONSTRUCTION PLAN, EXISTING SITE LAYOUT)

THERE ARE NO WETLANDS ON OR ADJACENT TO THE IMMEDIATE PROJECT BOUNDARY. THE SITE IS SOUTH OF THE BIG BLUE RIVER.

(A14) IDENTIFICATION OF ANY OTHER STATE OR FEDERAL WATER QUALITY PERMITS OR AUTHORIZATIONS THAT ARE REQUIRED FOR CONSTRUCTION ACTIVITIES

AN IDEM CONSTRUCTION STORMWATER GENERAL PERMIT (CSGP) NOTICE OF INTENT (NOI) PERMIT WILL BE REQUIRED FOR THIS PROJECT.

(A15) IDENTIFICATION AND DELINEATION OF EXISTING COVER, INCLUDING NATURAL BUFFERS

THE EXISTING SITE IS CURRENTLY COVERED BY: WOODED, VEGETATION, AND PAVEMENT.

(A16) EXISTING SITE TOPOGRAPHY AT AN INTERVAL APPROPRIATE TO INDICATE DRAINAGE PATTERNS

REFER TO EXISTING TOPOGRAPHY SHEET.

(A17) LOCATION(S) WHERE RUN-OFF ENTERS THE PROJECT SITE

REFER TO SHEET C900.

(A18) LOCATION(S) WHERE RUN-OFF DISCHARGES FROM THE PROJECT SITE PRIOR TO LAND DISTURBANCE

REFER TO SHEET C900.

(A19) LOCATION OF ALL EXISTING STRUCTURES ON THE PROJECT SITE

REFER TO EXISTING TOPOGRAPHY SHEET.

(A20) EXISTING PERMANENT RETENTION OR DETENTION FACILITIES, INCLUDING MANMADE WETLANDS, DESIGNED FOR THE PURPOSE OF STORMWATER MANAGEMENT

REFER TO SHEET C900.

(A21) LOCATIONS WHERE STORMWATER MAY BE DIRECTLY DISCHARGED INTO GROUND WATER, SUCH AS ABANDONED WELLS, SINKHOLES, OR KARST FEATURES

THERE ARE NO SINKHOLES OR UNCAPPED ABANDONED WELLS LOCATED ON THE PROJECT SITE OR DOWNSTREAM OF THE PROJECT SITE.

(A22) SIZE OF THE PROJECT AREA EXPRESSED IN ACRES

THE PROJECT SITE AREA IS APPROXIMATELY 10.42 ACRES. REFER TO SHEET C900.

(A23) TOTAL EXPECTED LAND DISTURBANCE EXPRESSED IN ACRES

THE OVERALL DISTURBED AREA IS APPROXIMATELY 9.60 ACRES. REFER TO SHEET C900.

(A24) PROPOSED FINAL TOPOGRAPHY

REFER TO GRADING PLAN SHEET C300.

(A25) LOCATIONS AND APPROXIMATE BOUNDARIES OF ALL DISTURBED AREAS

REFER TO SHEET C900.

(A26) LOCATIONS, SIZE, AND DIMENTIONS OF ALL STORMWATER DRAINAGE SYSTEMS SUCH AS CULVERTS, STORMWATER SEWER, AND CONVEYANCE CHANNELS

REFER TO SITE DEVELOPMENT PLAN SHEET C400.

(A27) LOCATIONS OF SPECIFIC POINTS WHERE STORMWATER AND NON-STORMWATER DISCHARGES WILL LEAVE THE PROJECT SITE

DISCHARGES INTO THE EXISTING DETENTION POND NORTH OF THE SITE THEN ULTIMATELY DISCHARGES INTO THE EXISTING DITCH NORTH OF THE SITE.

(A28) LOCATION OF ALL PROPOSED SITE IMPROVEMENTS, INCLUDING ROADS, UTILITIES, LOT DELINEATION AND IDENTIFICATION, PROPOSED STRUCTURES, AND COMMON AREAS

THE PROJECT BOUNDARIES CAN BE SEEN ON SHEETS C200, C400, & C500.

(A29) LOCATION OF ALL ON-SITE AND OFF-SITE SOIL STOCKPILES AND BORROW AREAS

NO PERMANENT SOIL STOCKPILES ARE PLANNED FOR THIS DEVELOPMENT. IF TEMPORARY STOCKPILE OR BORROW AREAS ARE UTILIZED DURING CONSTRUCTION THAN THE PERIMETER OF THE STOCKPILE AREA SHALL BE ENCOMPASSED WITH SILT FENCE.

(A30) CONSTRUCTION SUPPORT ACTIVITIES THAT ARE EXPECTED TO BE PART OF THE PROJECT

THE CONSTRUCTION SUPPORT ACTIVITIES CAN BE SEEN ON SHEETS C900..

(A31) LOCATION OF ANY IN-STREAM ACTIVITIES THAT ARE PLANNED FOR THE PROJECT INCLUDING, BUT NOT LIMITED TO, STREAM CROSSING AND PUMP AROUNDS

IN STREAM ACTIVITIES ARE NOT PLANNED FOR THIS PROJECT.

(A28) LOCATION OF ALL PROPOSED SITE IMPROVEMENTS, INCLUDING ROADS, UTILITIES, LOT DELINEATION AND IDENTIFICATION, PROPOSED STRUCTURES, AND COMMON AREAS

THE PROJECT BOUNDARIES CAN BE SEEN ON SHEETS C200, C400, & C500.

(A29) LOCATION OF ALL ON-SITE AND OFF-SITE SOIL STOCKPILES AND BORROW AREAS

NO PERMANENT SOIL STOCKPILES ARE PLANNED FOR THIS DEVELOPMENT. IF TEMPORARY STOCKPILE OR BORROW AREAS ARE UTILIZED DURING CONSTRUCTION THAN THE PERIMETER OF THE STOCKPILE AREA SHALL BE ENCOMPASSED WITH SILT FENCE.

(A30) CONSTRUCTION SUPPORT ACTIVITIES THAT ARE EXPECTED TO BE PART OF THE PROJECT

THE CONSTRUCTION SUPPORT ACTIVITIES CAN BE SEEN ON SHEETS C900.

(A31) LOCATION OF ANY IN-STREAM ACTIVITIES THAT ARE PLANNED FOR THE PROJECT INCLUDING, BUT NOT LIMITED TO, STREAM CROSSING AND PUMP AROUNDS

IN STREAM ACTIVITIES ARE NOT PLANNED FOR THIS PROJECT.

ASSESSMENT OF STORMWATER POLLUTION PREVENTION PLAN CONSTRUCTION COMPONENT (SECTION B)

(B1) DESCRIPTION OF THE POTENTIAL POLLUTANT GENERATING SOURCES AND POLLUTANTS, INCLUDING ALL POTENTIAL NON-STORMWATER DISCHARGES

POTENTIAL POLLUTANTS SOURCES RELATIVE TO A CONSTRUCTION SITE MAY INCLUDE, BUT ARE NOT LIMITED TO MATERIAL AND FUEL STORAGE AREAS, FUELING LOCATIONS, EXPOSED SOILS AND LEAKING VEHICLE/EQUIPMENT. POTENTIAL POLLUTANTS THAT MAY APPEAR AT THE SITE DUE TO CONSTRUCTION ACTIVITIES INCLUDE, BUT ARE NOT LIMITED TO DIESEL FUEL, GASOLINE, CONCRETE AND CONCRETE WASHOUT, SOLID WASTE, SEDIMENT, PAINT AND SOLVENTS, EQUIPMENT REPAIR PRODUCTS, ANTI–FREEZE AND FERTILIZER.

(B2) STABLE CONSTRUCTION ENTRANCE LOCATIONS AND SPECIFICATIONS

THE LOCATION OF THE CONSTRUCTION ENTRANCE IS ON SHEET C900.

(B3) SPECIFICATIONS FOR TEMPORARY AND PERMANENT STABILIZATION

TEMPORARY SEEDING AND EROSION CONTROL MATTING WILL BE USED AS TEMPORARY SURFACE STABILIZATION MEASURES. DUE TO THE ACCELERATED CONSTRUCTION TIMELINE OF THIS PROJECT, TEMPORARY SEEDING SHOULD NOT BE NECESSARY. REFER TO SHEETS C900 FOR SEEDING AREAS.

APPLY SEED UNIFORMLY.

INSPECT 24 HOURS AFTER EACH RAIN EVENT AND OR AT LEAST ONCE EVERY SEVEN CALENDAR DAYS.
USE PHOSPHOROUS FREE FERTILIZER (12–0–12) UNLESS SOIL TESTING SHOWS A NEED.

PERMANENT SEEDING WILL BE USED AS PERMANENT SURFACE STABILIZATION MEASURES. REFER TO SHEETS C900 FOR SEEDING AREAS. CONTRACTOR TO SEED ALL DISTURBED AREAS.

INSPECT 24 HOURS AFTER EACH RAIN EVENT AND OR AT LEAST ONCE EVERY SEVEN CALENDAR DAYS.
USE PHOSPHOROUS FREE FERTILIZER (12–0–12) UNLESS SOIL TESTING SHOWS A NEED.

(B4) SEDIMENT CONTROL MEASURES FOR CONCENTRATED FLOW AREAS

EROSION CONTROL BLANKETS WILL BE USED AS EROSION CONTROL MEASURES FOR CONCENTRATED FLOWS. THE LOCATION, DETAILS, AND SPECIFICATIONS FOR EACH STATED CONCENTRATED FLOW MEASURE IS ON SHEETS C900–C902.

(B5) SEDIMENT CONTROL MEASURES FOR SHEET FLOW AREAS

SILT FENCE, TEMPORARY SEEDING AND EROSION CONTROL INLET PROTECTION WILL BE USED AS EROSION CONTROL MEASURES FOR SHEET FLOWS. THE LOCATION, DETAILS, AND SPECIFICATIONS FOR EACH STATED SEDIMENT CONTROL MEASURE IS ON SHEETS C900–C902.

(B6) RUNOFF CONTROL MEASURES

FILTER SOCK, TEMPORARY SEEDING, AND EROSION CONTROL INLET PROTECTION WILL BE USED AS A RUNOFF CONTROL MEASURES FOR CONCENTRATED FLOWS. THE LOCATION, DETAILS, AND SPECIFICATIONS FOR EACH STATED CONCENTRATED FLOW MEASURE IS ON SHEETS C900–C902.

(B7) STORMWATER OUTLET PROTECTION LOCATION AND SPECIFICATIONS

REFER TO PLANS FOR THE LOCATION, DETAILS, AND SPECIFICATIONS FOR OUTLET PROTECTION– SHEETS C900–C902.

(B8) GRADE STABILIZATION STRUCTURE LOCATIONS AND SPECIFICATIONS

EROSION CONTROL BLANKETS WILL BE USED IN THIS PHASE ON GRADES GREATER THAN 3:1 AND/ OR EXPOSED TO CONCENTRATED FLOW. REFER TO CONSTRUCTION PLANS FOR LOCATIONS.

IF LIME STABILIZATION MEASURES ARE NEEDED DURING CONSTRUCTION TO OBTAIN COMPACTION. THE CONTRACTOR SHALL CONTAIN LIME FROM ENTERING EXISTING STORM SEWER SYSTEM BY ADEQUATELY CONTROLLING RUNOFF. CONTACT ENGINEER FOR SPECIFIC PLANS BASED ON THE AREA OF WORK.

(B9) DEWATERING APPLICATIONS AND MANAGEMENT METHODS

DEWATERING NOT APPLICABLE TO SITE.

(B10) MEASURES UTILIZED FOR WORK WITHIN WATERBODIES

NO WORK WILL BE OCCURRING WITHIN WATERBODIES.

(B11) MAINTENANCE GUIDELINES FOR EACH PROPOSED STORMWATER QUALITY SERVICE

EROSION CONTROL MEASURE	MAINTENANCE	INSTALLATION SEQUENCE
STONE ENTRANCE	AS NEEDED	PRIOR TO CLEARING AND GRADING
	WEEKLY, AFTER STORM EVENTS AND AS NEEDED	PRIOR TO CLEARING AND GRADING
ROCK CHECK DAMS	WEEKLY, AFTER STORM EVENTS AND AS NEEDED	ALONG WITH ROUGH GRADING
PERMANENT SEEDING	WATER AS NEEDED	AFTER FINISH GRADING
EROSION CONTROL BLANKET	WEEKLY, AFTER STORM EVENTS AND AS NEEDED	AFTER FINISH GRADING
SEED, SOD & LANDSCAPE AROUND	WATER AS NEEDED	AFTER FINISHED GRADING
DUST CONTROL	AS NEEDED	ALONG WITH ALL EARTHWORK ACTIVITIES
CONCRETE WASHOUT	WEEKLY, AFTER STORM EVENTS AND AS NEEDED	PRIOR TO START OF ANY CONCRETE WORK
SILT FENCE		
REMOVAL OF INLET PROTECTION	N/A	AFTER ALL AREAS DRAINING TO THESE AREAS ARE STABILIZED
REMOVAL OF SILT FENCE	N/A	AFTER ALL AREAS DRAINING TO THESE AREAS ARE STABILIZED
REMOVAL OF ROCK CHECK DAMS	N/A	AFTER ALL AREAS DRAINING TO THESE AREAS ARE STABILIZED

– SEE CHART FOR MAINTENANCE REQUIREMENTS

EROSION CONTROL MEASURES MAINTENANCE REQUIREMENTS

SILT FENCE MAINTENANCE REQUIREMENTS:

1. INSPECT THE SILT FENCE PERIODICALLY AND AFTER EACH STORM EVENT.
2. IF FENCE TEARS, STARTS TO DECOMPOSE, OR IN ANY WAY BECOMES INEFFECTIVE, REPLACE THE AFFECTED PORTION IMMEDIATELY.
3. REMOVE DEPOSITED SEDIMENT WHEN IT REACHES HALF OF THE HEIGHT OF THE FENCE AT ITS LOWEST POINT OR IS CAUSING THE FABRIC TO BULGE.
4. TAKE CARE TO AVOID UNDERMINING THE FENCE DURING CLEAN OUT.
5. AFTER THE CONTRIBUTING DRAINAGE AREA HAS BEEN STABILIZED, REMOVE THE FENCE AND SEDIMENT DEPOSITS, BRING THE DISTURBED AREA TO GRADE, AND STABILIZE

TEMPORARY GRAVEL CONSTRUCTION ENTRANCE MAINTENANCE REQUIREMENTS:

1. INSPECT ENTRANCE PAD AND SEDIMENT DISPOSAL AREA WEEKLY AND AFTER STORM EVENTS OR HEAVY USE
2. RESHAPE PAD AS NEEDED FOR DRAINAGE AND RUNOFF CONTROL
3. TOP DRESS WITH CLEAN STONE AS NEEDED..
4. IMMEDIATELY REMOVE MUD AND SEDIMENT TRACKED OR WASHED ONTO PUBLIC ROADS BY BRUSHING OR SWEEPING. FLUSHING SHOULD ONLY BE USED IF THE WATER IS CONVEYED INTO A SEDIMENT TRAP OR BASIN.

EROSION CONTROL BLANKET MAINTENANCE REQUIREMENTS:

1. INSPECT EACH EROSION CONTROL BLANKET AREAS WEEKLY AND AFTER STORM E VENTS OR HEAVY USE
2. CHECK FOR DISPLACEMENT OF BLANKET.
3. AREAS DISPLACED, PULL BACK PORTION OF BLANKET COVERING THE ERODED AREA, ADD SOIL AND TAMP, RESEED THE AREA. REPLACE AND STAPLE BLANKET.

CONCRETE WASHOUT MAINTENANCE REQUIREMENTS:

1. INSPECT EACH CONCRETE WASHOUT AREAS DAILY AND AFTER STORM EVENTS OR HEAVY USE.
2. INSPECT THE INTEGRITY OF THE OVERALL STRUCTURE. CHECK FOR LEAKS, SPILLS OR TRACKING OF SOIL BY EQUIPMENT.
3. REMOVE EXCESS CONCRETE WHEN WASHOUT SYSTEM REACHES 50% OF THE DESIGN CAPACITY, UPON REMOVAL, INSPECT STRUCTURE, REPAIR AS NEEDED.
4. DISPOSE OF ALL CONCRETE IN A LEGAL MANNER.
5. REPLACE PLASTIC LINER AFTER EVERY CLEANING. ENLARGE AS NECESSARY TO MAINTAIN CAPACITY.

ROCK CHECK DAM MAINTENANCE REQUIREMENTS:

1. INSPECT CHECK DAMS AND THE CHANNEL AFTER EACH STORM EVENT, AND REPAIR ANY DAMAGE IMMEDIATELY. IF SIGNIFICANT EROSION OCCURS BETWEEN DAMS, INSTALL A RIPRAP LINER IN THAT PORTION OF THE CHANNEL.
2. REMOVE SEDIMENT ACCUMULATED BEHIND EACH DAM AS NEEDED TO MAINTAIN CHANNEL CAPACITY, TO ALLOW DRAINAGE THROUGH THE DAM, AND TO PREVENT LARGE FLOWS FROM DISPLACING SEDIMENT.
3. ADD AGGREGATE TO THE DAMS AS NEEDED TO MAINTAIN DESIGN HEIGHT AND CROSS SECTION.
4. WHEN THE DAMS ARE NO LONGER NEEDED, REMOVE THE AGGREGATE AND STABILIZE CHANNEL USING EROSION RESISTANT LINING IF NECESSARY

INLET PROTECTION MAINTENANCE REQUIREMENTS:

1. INSPECT EACH INLET PROTECTION MEASURE WEEKLY AND AFTER STORM OR HEAVY USE
2. INSPECT STORM INLET BASKET OR GEOTEXTILE FABRIC AND MAKE REPAIRS.
3. REMOVE ANY SEDIMENT. AVOID DAMAGING OR UNDERCUTTING FABRIC.

(B12) STORMWATER QUALITY SEQUENCE

PRE–CONSTRUCTION ACTIVITIES:

SCHEDULE A PRE–CONSTRUCTION MEETING WITH CITY OF (CITY AND COUNTY) SOIL & WATER.

DESIGNATE A PERSON TO BE RESPONSIBLE FOR THE SITE INSPECTIONS AFTER EACH 1/2" RAIAND A MINIMUM OF ONCE EACH WEEK.

CALL THE INDIANA UNDERGROUND PLANT PROTECTION SYSTEMS, INC. (HOLEY MOLEY) AT 1–800–382–5544 TO CHECK LOCATIONS OF ANY EXISTING UTILITIES– MIN, 2 DAYS PRIOR BEFORE CONSTRUCTION ACTIVITY.

ESTABLISH ONSITE LOCATION FOR OWNER/OPERATOR/CONTRACTOR PLACEMENT OF APPROVED PLANS AND CSGP NOI AND CSGP INSPECTION DOCUMENTATION.

INSTALL SILT FENCE AND OTHER EROSION CONTROL MEASURES AS INDICATED ON DRAWINGS.

INSTALL GRAVEL CONSTRUCTION ENTRANCE AS INDICATED ON DRAWINGS– ADD ADDITIONAL STONE AS NEEDED.

ESTABLISH CONSTRUCTION STAGING AREA FOR EQUIPMENT AND VEHICLES.

CONSTRUCTION ACTIVITY PHASING:

AFTER EROSION AND SEDIMENT CONTROL MEASURES ARE IN PLACE, BEGIN LAND CLEARING FOLLOWED IMMEDIATELY BY ROUGH GRADING. EROSION CONTROL FOR LARGE UNPROTECTED AREAS MUST BE INITIATED WITHIN 7 DAYS OF EXPOSURE, AND MUST BE COMPLETE BY DAY 14 OF EXPOSURE. CONSTRUCT CONCRETE WASH STATION BEFORE CONCRETE WORK IS TO COMMENCE ON SITE. REFER TO PLAN FOR LOCATION.

INSTALL SEWERS, ALL UTILITIES AND UNDERDRAINS. ADD INLET PROTECTION MEASURES AS INDICATED ON PLANS.

AFTER COMPLETION OF MASS GRADING AND FINAL GRADING: SEED ALL DISTURBED AREAS, COMMON AREAS AND SWALES IMMEDIATELY AFTER GRADING IS COMPLETED.

PLACE TOPSOIL IN ALL TURF AND LANDSCAPE AREAS.

INSTALL PAVEMENT AND FINAL GRADE AREA.

INSTALL LANDSCAPING AND FINAL SEEDING.

REMOVE ALL SEDIMENT CONTROL PRACTICES ONCE THE SITE IS STABILIZED.

NOTE: INSTALL TEMPORARY SEEDING AFTER A SPECIFIC STAGE OF CONSTRUCTION HAS BEEN COMPLETED (TEMPORARY OR FINAL) WHERE AREAS WILL BE IDLE OF CONSTRUCTION ACTIVITIES FOR A PERIOD OF 7 DAYS OR MORE.

(B13) PROVISIONS FOR EROSION AND SEDIMENT CONTROL ON INDIVIDUAL RESIDENTIAL BUILDING LOTS REGULATED UNDER THE PROPOSED PROJECT

NO ADDITIONAL EROSION CONTROL SPECIFICATIONS ARE NEEDED FOR THIS PHASE.

(B14) MATERIAL HANDLING AND SPILL PREVENTION AND SPILL RESPONSE PLAN MEETING THE REQUIREMENTS IN 327 IAC 2-6.1

EXPECTED MATERIALS THAT MAY APPEAR AT THE SITE DUE TO CONSTRUCTION ACTIVITIES INCLUDE, BUT ARE NOT LIMITED TO PETROLEUM PRODUCTS, FERTILIZERS, PAINT AND SOLVENTS, AND CONCRETE. MATERIALS SHALL BE STORED IN THE DESIGNATED MATERIAL STORAGE AREA.

SPILL PREVENTION FOR VEHICLE AND EQUIPMENT FUELING SHALL CONFORM TO THE FOLLOWING PRACTICES: VEHICLE EQUIPMENT FUELING PROCEDURES AND PRACTICES ARE DESIGNED TO PREVENT FUEL SPILLS AND LEAKS, AND REDUCE OR ELIMINATE CONTAMINATION OF STORMWATER. THIS CAN BE ACCOMPLISHED BY USING OFFSITE FACILITIES, FUELING IN DESIGNATED AREAS ONLY, ENCLOSING OR COVERING STORED FUEL, IMPLEMENTING SPILL CONTROLS, AND TRAINING EMPLOYEES AND SUBCONTRACTORS IN PROPER FUELING PROCEDURES. LIMITATIONS: ONSITE VEHICLE AND EQUIPMENT FUELING SHOULD ONLY BE USED WHERE IT IS IMPRACTICAL TO SEND VEHICLES AND EQUIPMENT OFFSITE FOR FUELING. SENDING VEHICLES AND EQUIPMENT OFFSITE SHOULD BE DONE IN CONJUNCTION WITH A STABILIZED CONSTRUCTION ENTRANCE/EXIT. IMPLEMENTATION: USE OFFSITE FUELING STATIONS AS MUCH AS POSSIBLE. DISCOURAGE "TOPPING–OFF" OF FUEL TANKS. ABSORBENT SPILL CLEANUP MATERIALS AND SPILL KITS SHOULD BE AVAILABLE IN FUELING AREAS AND ON FUELING TRUCKS, AND SHOULD BE DISPOSED OF PROPERLY AFTER USE. DRIP PANS OR ABSORBENT PADS SHOULD BE USED DURING VEHICLE AND EQUIPMENT FUELING, UNLESS THE FUELING IS PERFORMED OVER AN IMPERMEABLE SURFACE IN A DEDICATED FUELING AREA. USE ABSORBENT MATERIALS ON SMALL SPILLS. DO NOT HOSE DOWN OR BURY THE SPILL. REMOVE THE ABSORBENT MATERIALS PROMPTLY AND DISPOSE OF PROPERLY. AVOID MOBILE FUELING OF MOBILE CONSTRUCTION EQUIPMENT AROUND THE SITE; RATHER, TRANSPORT THE EQUIPMENT TO DESIGNATED FUELING AREAS. TRAIN EMPLOYEES AND SUBCONTRACTORS IN PROPER FUELING AND CLEANUP PROCEDURES. DEDICATED FUELING AREAS SHOULD BE PROTECTED FROM STORMWATER RUNON AND RUNOFF, AND SHOULD BE LOCATED AT LEAST 50 FT AWAY FROM DOWNSTREAM DRAINAGE FACILITIES AND WATERCOURSES. FUELING MUST BE PERFORMED ON LEVEL–GRADE AREA. PROTECT FUELING AREAS WITH BERMS AND DIKES TO PREVENT RUNON, RUNOFF, AND TO CONTAIN SPILLS. NOZZLES USED IN VEHICLE AND EQUIPMENT FUELING SHOULD BE EQUIPPED WITH AN AUTOMATIC SHUTOFF TO CONTROL DRIPS. FUELING OPERATIONS SHOULD NOT BE LEFT UNATTENDED. FEDERAL, STATE, AND LOCAL REQUIREMENTS SHOULD BE OBSERVED FOR ANY STATIONARY ABOVE GROUND STORAGE TANKS.

VEHICLES AND EQUIPMENT SHOULD BE INSPECTED EACH DAY OF USE FOR LEAKS. LEAKS SHOULD BE REPAIRED IMMEDIATELY OR PROBLEM VEHICLES OR EQUIPMENT SHOULD BE REMOVED FROM THE PROJECT SITE. KEEP AMPLE SUPPLIES OF SPILL CLEANUP MATERIALS ONSITE. IMMEDIATELY CLEAN UP SPILLS AND PROPERLY DISPOSE OF CONTAMINATED SOILS.

SPILL PREVENTION FOR SOLID WASTE SHALL CONFORM TO THE FOLLOWING PRACTICES: SOLID WASTE MANAGEMENT PROCEDURES AND PRACTICES ARE DESIGNED TO PREVENT OR REDUCE THE DISCHARGE OF POLLUTANTS TO STORMWATER FROM SOLID OR CONSTRUCTION WASTE BY PROVIDING DESIGNATED WASTE COLLECTION AREAS AND CONTAINERS, ARRANGING FOR REGULAR DISPOSAL, AND TRAINING EMPLOYEES AND SUBCONTRACTORS. SOLID WASTE GENERATED FROM TREES AND SHRUBS REMOVED DURING LAND CLEARING, DEMOLITION OF EXISTING STRUCTURES, AND BUILDING CONSTRUCTION. PACKAGING MATERIALS INCLUDING WOOD, PAPER, AND PLASTIC. SCRAP OR SURPLUS BUILDING MATERIALS INCLUDING SCRAP METALS, RUBBER, PLASTIC, GLASS PIECES AND MASONRY PRODUCTS. DOMESTIC WASTES INCLUDING FOOD CONTAINERS SUCH AS BEVERAGE CANS, COFFEE CUPS, PAPER BAGS, PLASTIC WRAPPERS, AND CIGARETTES. CONSTRUCTION WASTES INCLUDING BRICK, MORTAR, TIMBER, STEEL AND METAL SCRAPS, PIPE AND ELECTRICAL CUTTINGS, NON–HAZARDOUS EQUIPMENT PARTS, STYROFOAM AND OTHER PACKAGE CONSTRUCTION MATERIALS. SELECT DESIGNATED WASTE COLLECTION AREAS ONSITE. INFORM TRASH–HAULING CONTRACTORS THAT YOU WILL ACCEPT ONLY WATERTIGHT DUMPSTERS FOR ONSITE USE. INSPECT DUMPSTERS FOR LEAKS AND REPAIR ANY DUMPSTER THAT IS NOT WATERTIGHT. PROVIDE AN ADEQUATE NUMBER OF CONTAINERS WITH LIDS OR COVERS THAT CAN BE PLACED OVER THE CONTAINER TO KEEP RAIN OUT OR TO PREVENT LOSS OF WASTES WHEN IT IS WINDY. PLAN FOR ADDITIONAL CONTAINERS AND MORE FREQUENT PICKUP DURING THE DEMOLITION PHASE OF CONSTRUCTION. COLLECT SITE TRASH DAILY, ESPECIALLY DURING RAINY AND WINDY CONDITIONS. REMOVE THIS SOLID WASTE PROMPTLY SINCE EROSION AND SEDIMENT CONTROL DEVICES TEND TO COLLECT LITTER. MAKE SURE THAT TOXIC LIQUID WASTES (SUED OILS, SOLVENTS AND PAINTS) AND CHEMICALS (ACIDS, PESTICIDES, ADDITIVES, CURING COMPOUNDS) ARE NOT DISPOSED OF IN DUMPSTERS DESIGNED FOR CONSTRUCTION DEBRIS. DO NOT HOSE OUT DUMPSTERS ON THE CONSTRUCTION SITE. LEAVE DUMPSTER CLEANING TO THE TRASH HAULING CONTRACTOR. ARRANGE FOR REGULAR WASTE COLLECTION BEFORE CONTAINERS OVERFLOW. CLEAN UP IMMEDIATELY IF A CONTAINER DOES SPILL. MAKE SURE THAT CONSTRUCTION WASTE IS COLLECTED, REMOVED, AND DISPOSED OF ONLY AT AUTHORIZED DISPOSAL AREAS. SOLID WASTE STORAGE AREAS SHOULD BE LOCATED AT LEAST 50 FT FROM DRAINAGE FACILITIES AND WATERCOURSES AND SHOULD NOT BE LOCATED IN AREAS PRONE TO FLOODING OR PONDING. INSPECT CONSTRUCTION WASTE AREA REGULARLY. ARRANGE FOR REGULAR WASTE COLLECTION.

SPILL PREVENTION FOR CONCRETE WASHOUT SHALL CONFORM TO THE FOLLOWING PRACTICES: STORE DRY AND WET MATERIALS UNDER COVER, AWAY FROM DRAINAGE AREAS. AVOID MIXING EXCESS AMOUNTS OF FRESH CONCRETE. PERFORM WASHOUT OF CONCRETE TRUCKS OFFSITE OR IN DESIGNATED AREAS ONLY. DO NOT WASH OUT CONCRETE TRUCKS INTO STORM DRAINS, OPEN DITCHES, STREETS, OR STREAMS. DO NOT ALLOW EXCESS CONCRETE TO BE DUMPED ONSITE, EXCEPT IN DESIGNATED AREAS. LOCATE WASHOUT AREAS AT LEAST 50 FT FROM STORM DRAINS, OPEN DITCHES, OR WATER BODIES. DO NOT ALLOW RUNOFF FROM THIS AREA BY CONSTRUCTING A TEMPORARY PIT OR BERMED AREA LARGE ENOUGH FOR LIQUID AND SOLID WASTE. WASH OUT WASTES INTO THE TEMPORARY PIT WHERE THE CONCRETE CAN SET, BE BROKEN UP, AND THEN DISPOSED PROPERLY. AVOID CREATING RUNOFF BY DRAINING WATER TO A BERMED OR LEVEL AREA WHEN WASHING CONCRETE TO REMOVE FINE PARTICLES AND EXPOSE THE AGGREGATE. DO NOT WASH SWEEPINGS FROM EXPOSED AGGREGATE CONCRETE INTO THE STREET OR STORM DRAIN. COLLECT AND RETURN SWEEPINGS TO AGGREGATE BASE STOCKPILE OR DISPOSE IN THE TRASH.

THE CLEANUP PARAMETERS SHALL CONFORM TO THE FOLLOWING PRACTICES: THE DEVELOPER SHALL BE CONTINUALLY KEPT INFORMED, MAINTAIN LISTS OF QUALIFIED CONTRACTORS AND AVAILABLE VAC–TRUCKS, TANK PUMPERS AND OTHER EQUIPMENT READILY ACCESSIBLE FOR CLEANUP OPERATIONS. IN ADDITION, A CONTINUALLY UPDATED LIST OF AVAILABLE ABSORBENT MATERIALS AND CLEANUP SUPPLIES SHOULD BE KEPT ON SITE. ALL MAINTENANCE PERSONNEL WILL BE MADE AWARE OF TECHNIQUES FOR PREVENTION OF SPILLS. THEY WILL BE INFORMED OF THE REQUIREMENTS AND PROCEDURES OUTLINED IN THIS PLAN. THEY WILL BE KEPT ABREAST OF CURRENT DEVELOPMENTS OR NEW INFORMATION ON THE PREVENTION OF SPILLS AND / OR NECESSARY ALTERATION TO THIS PLAN. WHEN SPILLS OCCUR WHICH COULD ENDANGER HUMAN LIFE AND THIS BECOME PRIMARY CONCERN, THE DISCHARGE OF THE LIFE SAVING PROTECTION FUNCTION WILL BE CARRIED OUT BY THE LOCAL POLICE AND FIRE DEPARTMENTS. ABSORBENT MATERIALS, WHICH ARE USED IN CLEANING UP SPILLED MATERIALS, WILL BE DISPOSED OF IN A MANNER SUBJECT TO THE APPROVAL OF THE INDIANA DEPARTMENT OF ENVIRONMENTAL MANAGEMENT. FLUSHING OF SPILLED MATERIAL WITH WATER WILL NOT BE PERMITTED UNLESS SO AUTHORIZED BY THE INDIANA DEPARTMENT OF ENVIRONMENTAL MANAGEMENT.

SPILL PREVENTION FOR VEHICLE AND EQUIPMENT MAINTENANCE SHALL CONFORM TO THE FOLLOWING PRACTICES: PREVENT OR REDUCE THE CONTAMINATION OF STORMWATER RESULTING FROM VEHICLE AND EQUIPMENT MAINTENANCE BY RUNNING A "DRY AND CLEAN SITE". THE BEST OPTION WOULD BE TO PERFORM MAINTENANCE ACTIVITIES AT AN OFFSITE FACILITY. IF THIS OPTION IS NOT AVAILABLE THEN WORK SHOULD BE PERFORMED IN DESIGNATED AREAS ONLY, WHILE PROVIDING COVER FOR MATERIALS STORED OUTSIDE, CHECKING FOR LEAKS AND SPILLS, AND CONTAINING AND CLEANING UP SPILLS IMMEDIATELY. THESE PROCEDURES ARE SUITABLE ON ALL CONSTRUCTION PROJECTS WHERE AN ONSITE YARD AREA IS NECESSARY FOR STORAGE AND MAINTENANCE OF HEAVY EQUIPMENT AND VEHICLES. ONSITE VEHICLE AND EQUIPMENT MAINTENANCE SHOULD ONLY BE USED WHERE IT IS IMPRACTICAL TO SEND VEHICLES AND EQUIPMENT OFFSITE FOR MAINTENANCE AND REPAIR. SENDING VEHICLES / EQUIPMENT OFFSITE SHOULD BY DONE IN CONJUNCTION WITH A STABILIZED CONSTRUCTION ENTRANCE / EXIT. OUT DOOR VEHICLE OR EQUIPMENT MAINTENANCE IS A POTENTIALLY SIGNIFICANT SOURCE OF STORMWATER POLLUTION. ACTIVITIES THAT CAN CONTAMINATE STORMWATER INCLUDE ENGINE REPAIR AND SERVICE, CHANGING OR REPLACEMENT OF FLUIDS, AND OUTDOOR EQUIPMENT STORAGE AND PARKING (ENGINE FLUID LEAKS). IF MAINTENANCE MUST OCCUR ONSITE, USE DESIGNATED AREAS, LOCATED AWAY FROM DRAINAGE COURSES. DEDICATED MAINTENANCE AREAS SHOULD BE PROTECTED FROM STORMWATER RUNON AND RUNOFF, AND SHOULD BE LOCATED AT LEAST 50 FT FROM DOWNSTREAM DRAINAGE FACILITIES AND WATER COURSES. DRIP PANS OR ABSORBENT PADS SHOULD BE USED DURING VEHICLE AND EQUIPMENT MAINTENANCE WORK THAT INVOLVES FLUIDS, UNLESS THE MAINTENANCE WORK IS PERFORMED OVER AND IMPERMEABLE SURFACE IN A DEDICATED MAINTENANCE AREA. PLACE A STOCKPILE OF SPILL CLEANUP MATERIALS WHERE IT WILL BE READILY ACCESSIBLE. ALL FUELING TRUCKS AND FUELING AREAS ARE REQUIRED TO HAVE SPILL KITS AND/OR USE OTHER SPILL PROTECTION DEVICES. USE ABSORBENT MATERIALS ON SMALL SPILLS. REMOVE THE ABSORBENT MATERIALS PROMPTLY AND DISPOSE OF PROPERLY. INSPECT ONSITE VEHICLES AND EQUIPMENT DAILY AT STARTUP FOR LEAKS, AND REPAIR IMMEDIATELY. KEEP VEHICLES AND EQUIPMENT CLEAN; DO NOT ALLOW EXCESSIVE BUILDUP OF OIL AND GREASE. SEGREGATE AND RECYCLE WASTES, SUCH AS GREASES, USED OIL OR OIL FILTERS, ANTIFREEZE, CLEANING SOLUTIONS, AUTOMOTIVE BATTERIES, HYDRAULIC AND TRANSMISSION FLUIDS. PROVIDE SECONDARY CONTAINMENT AND COVERS FOR THESE MATERIALS IF STORED ONSITE. TRAIN EMPLOYEES AND SUBCONTRACTORS IN PROPER MAINTENANCE AND SPILL CLEANUP PROCEDURES. DRIP PANS OR PLASTIC SHEETING SHOULD BY PLACED UNDER ALL VEHICLES AND EQUIPMENT PLACED ON DOCKS, BARGES, OTHER STRUCTURES OVER WATER BODIES WHEN THE VEHICLE OR EQUIPMENT IS PLANNED TO BE IDLE FOR MORE THAN 1 HOUR. PROPERLY DISPOSE OF USED OILS, FLUIDS, LUBRICANTS, AND SPILL CLEANUP MATERIALS. PROPERLY DISPOSE OF OR RECYCLE USED BATTERIES. DO NOT PLACE USED OIL IN A DUMPSTER OR POUR INTO A STORM DRAIN OR WATER COURSE. PROPERLY DISPOSE OF USED OILS, FLUIDS, LUBRICANTS, AND SPILL CLEANUP MATERIALS. DON NOT BURY TIRES. REPAIR LEAKS OF FLUIDS AND OIL IMMEDIATELY.

SPILL PREVENTION FOR FERTILIZERS SHALL CONFORM TO THE FOLLOWING PRACTICES: FERTILIZER'S USED WILL BE APPLIED ONLY IN THE MINIMUM AMOUNTS RECOMMENDED BY THE MANUFACTURER. ONCE APPLIED, FERTILIZER WILL BE WORKED INTO THE SOIL TO LIMIT EXPOSURE TO STORM WATER. THE CONTENTS OF ANY PARTIALLY USED BAGS OF FERTILIZER WILL BE TRANSFERRED TO A SEALABLE PLASTIC BIN TO AVOID SPILLS.

SPILL PREVENTION FOR PAINT AND SOLVENTS SHALL CONFORM TO THE FOLLOWING PRACTICES: ALL CONTAINERS WILL BE TIGHTLY SEALED AND STORED WHEN NOT REQUIRED FOR USE. EXCESS PAINT WILL NOT BE DISCHARGED TO THE STORM SEWER SYSTEM BUT WILL BE PROPERLY DISPOSED OF ACCORDING TO MANUFACTURERS' INSTRUCTIONS OR STATE OR LOCAL REGULATIONS.

SPILL PREVENTION FOR PORTABLE TOILETS SHALL CONFORM TO THE FOLLOWING PRACTICE: ALL PORTABLE TOILETS MUST BE ANCHORED TO PREVENT SPILLS.

SPILL PREVENTION AND CLEANUP SHALL CONFORM TO IDEM FORM 327 IAC 2–6 AND THE Greenwood FIRE DEPARTMENT SHALL BE CONTACTED IN THE CASE OF A MATERIAL SPILL OCCURRING.

City of Greenwood Fire Department: (317) 882–2599
City of Greenwood Police Department: (317) 882–9191
Johnson County Soil & Water District (317)736–9540
IDEM Emergency Spill Reporting: (317) 233–7745 or (888) 233–7745

ASSESSMENT OF STORMWATER POLLUTION PREVENTION PLAN COMPONENT (SECTION C)

(C1) DESCRIPTION OF POLLUTATNTS AND THEIR SOURCES ASSOCIATED WITH THE PROPOSED LAND USE

POTENTIAL POLLUTANT SOURCES THAT MAY APPEAR AT THE SITE DUE TO PROPOSED LAND USE ACTIVITIES, BUT ARE NOT LIMITED TO VEHICLES, EXPOSED SOIL AND TRASH. POTENTIAL POLLUTANTS INCLUDE, BUT ARE NOT LIMITED TO OIL, GREASE, DIESEL FUEL, GASOLINE, ANTI–FREEZE, AUTO SOAP AND FERTILIZER.

(C2) DESCRIPTION OF PROPOSED POST-CONSTRUCTION STORMWATER MEASURES

POST CONSTRUCTION STORMWATER QUALITY MEASURES TO AID IN REDUCING THE AMOUNT OF POLLUTANTS:

1. POST CONSTRUCTION STORMWATER QUALITY MEASURES WILL CONSIST OF VEGETATIVE COVER ON THE PERMANENT GRASS AREAS AND EROSION CONTROL BLANKETS IN SPECIFIED AREAS. BOTH THE VEGETATIVE COVER AND EROSION CONTROL BLANKETS ARE INTENDED TO STABILIZE THE DISTURBED AREAS AND TO SERVE AS A SEDIMENT TRAP FOR FINER PARTICLES WITHIN THE STORM SEWER SYSTEM.

2. THE USE OF INLETS WITHIN THE STORM SEWER SYSTEM HAS BEEN UTILIZED. MAINTENANCE OF THE INLETS WILL BE THE RESPONSIBILITY OF THE OWNER AND/OR AGENCY TAKING JURISDICTION OVER THE STORM SEWER INFRASTRUCTURE IMPROVEMENTS.

3. ENERGY DISSIPATION MEASURES HAVE BEEN INCLUDED AT ALL END SECTIONS LOCATIONS FOR THE OUTLET POINTS OF THE STORM SEWER SYSTEM AND WILL NEED TO BE MAINTAINED TO INSURE PROPER SLOPE BANK STABILITY.

4. A WET POND AREA IS PROPOSED TO BOTH DETAIN STORMWATER RUNOFF AND PROVIDE A WATER QUALITY IMPROVEMENTS.

5. ALTHOUGH NOT CURRENTLY A PART OF THE PROPOSED SYSTEM, THE OWNER SHOULD BE AWARE THAT IF AN EXCESS OF POLLUTANTS IS DETERMINED TO BE FOUND LEAVING THE SITE, ADDITIONAL MEASURES SUCH AS INLET DROP IN FILTERS MAY BE REQUIRED IN THE FUTURE TO FURTHER REDUCE THE AMOUNT OF FINES AND PETROLEUM PRODUCTS ENTERING THE STORM SEWER SYSTEM FROM THE ROADWAY SYSTEM.

6. A MECHANICAL BMP DIVERSION STRUCTURE IS PROPOSED FOR THIS PROJECT. THE OWNER SHALL FOLLOW THE OPERATION AND MAINTENANCE SCHEDULE AS DEFINED IN THE PROJECT O&M MANUAL. INSPECTIONS SHALL OCCUR AS DEFINED IN THE PROJECT O&M MANUAL.

(C3) PLAN DETAILS FOR EACH STORMWATER MEASURE

THE STORMWATER QUALITY MEASURES FOR POST CONSTRUCTION ACTIVITIES ARE INDICATED WITHIN THESE CONSTRUCTION DOCUMENTS. REFER TO SHEET C900 FOR EROSION CONTROL MEASURES TO BE IMPLEMENTED WITHIN THE PROJECT SITE, REFER TO SHEET C400 FOR STORM SEWER IMPROVEMENTS, PROPOSED STORM SEWER NETWORK ARE INTENDED TO SERVE THE POST CONSTRUCTED AREA. DIMENSIONS, SPECIFICATIONS AND CONSTRUCTION DETAILS FOR THESE STORMWATER QUALITY MEASURES ARE INCLUDED WITHIN THE AFOREMENTIONED SERIES OF CONSTRUCTION DOCUMENTS.

(C4) SEQUENCE DESCRIBING STORMWATER MEASURE IMPLEMENTATION

THE STORMWATER QUALITY MEASURE IMPLEMENTATION SHALL BE BEGIN AFTER SUBSTANTIAL COMPLETION OF THE CONSTRUCTION ACTIVITIES FOR THE PROPOSED PROJECT. ADDITIONAL STORMWATER QUALITY MEASURES WILL BE IMPLEMENTED AT THE DEVELOPMENT OF SUBSEQUENT CONSTRUCTION PHASES. FOLLOWING CONSTRUCTION, ALL EROSION CONTROL MEASURES SHALL BE INSPECTED AND MAINTAINED UNTIL ALL PERMANENT MEASURES, WATER QUALITY PLANTINGS AND VEGETATION HAS BEEN ESTABLISHED AND CONSTRUCTION, INCLUDING LANDSCAPING, IS COMPLETE.

INDIVIDUAL EROSION CONTROL MEASURES MAY BE REMOVED FROM INLET PROTECTION STATUS FOLLOWING SEEDING AND AFTER SUFFICIENT VEGETATION HAS BEEN ESTABLISHED IN AN AREA TO PREVENT SILT AND SOIL EROSION INTO THE STORM SEWER SYSTEM.

INSPECTION AND MAINTENANCE OF ALL COMMON AREAS, LANDSCAPE AREAS AND INFRASTRUCTURE IMPROVEMENTS, MECHANICAL BMP UNIT, AND DETENTION POND ARE THE RESPONSIBILITY OF THE DEVELOPER/OWNER AND OR LOCAL AGENCIES TAKING JURISDICTION OVER THE INFRASTRUCTURE IMPROVEMENTS.

(C5) MAINTENANCE GUIDELINES FOR POST-CONSTRUCTION STORMWATER MEASURES

OWNER WILL PROVIDE MAINTENANCE ACTIVITIES FOR THE POST CONSTRUCTION WATER QUALITY MEASURES. MAINTENANCE ACTIVITIES WILL BE COMPLETED AS DESCRIBED BELOW.

1. ALL INLET CASTINGS WILL BE INSPECTED MONTHLY. DEBRIS AND TRASH AROUND OR OBSTRUCTING INLETS WILL BE REMOVED AND DISPOSED PROPERLY.

2. END SECTIONS WILL BE INSPECTED QUARTERLY. TRASH, STICKS, DEBRIS, AND SEDIMENT WILL BE REMOVED TO ENSURE PROPER PERFORMANCE OF THE END SECTION. RESET RIPRAP IF DISPLACED BY A LARGE RAIN EVENT. ADD ADDITIONAL RIPRAP IF NECESSARY.

3. GRASS AREAS SURROUNDING INLETS WILL BE MAINTAINED ON A REGULAR MOWING CYCLE. TRASH AND DEBRIS WILL BE REMOVED FROM SEEDED AND PAVED AREAS.

4. DAMAGE TO INLET CASTINGS, INLET STRUCTURES, STORM STRUCTURES, OR CATCH BASINS SHOULD BE REPAIRED AS SOON AS POSSIBLE.

5. A MECHANICAL BMP STRUCTURE IS PROPOSED FOR THIS PROJECT. THE OWNER SHALL INSPECT THE SYSTEM ON AT LEAST A MONTHLY BASIS. MORE FREQUENT INSPECTIONS MAY NEED TO TAKE PLACE DURING PERIODS OF HEAVY RAINFALL. THE BMP SHOULD BE INSPECTED FOR FLOATABLE DEBRIS AND FROM ACCUMULATED SEDIMENT. ANY EXCESS SEDIMENT SHOULD BE COLLECTED TO BE REMOVED OF IN A PROPER LOCATION SO THAT THE DEBRIS DOES NOT ENTER INTO THE DOWNSTREAM STORMWATER SYSTEM. ALL MAINTENANCE REQUIREMENTS ARE THE RESPONSIBILITY OF THE OWNER. THE OWNER SHALL FOLLOW THE OPERATION AND MAINTENANCE SCHEDULE AS DEFINED IN THE PROJECT O&M MANUAL. INSPECTIONS SHALL OCCUR AS DEFINED IN THE PROJECT O&M MANUAL.

6. DETENTION SYSTEM SHALL BE MAINTAINED. DEBRIS AND SILT ACCUMULATION SHALL BE REMOVED.

7. THE OWNER SHALL FOLLOW THE OPERATION AND MAINTENANCE SCHEDULE AS DEFINED IN THE PROJECT O&M MANUAL. INSPECTIONS SHALL OCCUR AS DEFINED IN THE PROJECT O&M MANUAL.

(C6) ENTITY THAT WILL BE RESPONSIBLE FOR OPERATION AND MAINTENANCE OF THE POST-CONSTRUCTION STORMWATER MEASURES

EROSION CONTROL RESPONSIBLE PERSON

THE PERSON RESPONSIBLE FOR THE INSTALLATION AND MAINTENANCE OF THE EROSION CONTROL IS LISTED BELOW.

OWNER:
JOE TASSONE
ECHO GREENWOOD, LLC
560 EPSILON DR
PITTSBURGH, PA 15238
PHONE: (412)–850–5321
EMAIL: jtassone@echorealty.com

PRELIMINARY
NOT FOR CONSTRUCTION

NICHOLAS P. JUSTICE — REGISTERED — No. PE11800753 — STATE OF INDIANA — PROFESSIONAL ENGINEER
08/09/2022

SUBMITTAL & REVISION RECORD

NO	DATE	DESCRIPTION

Civil & Environmental Consultants, Inc.
530 E. Ohio Street · Suite G - Indianapolis, IN 46204
317-655-7777 · 877-746-0749
www.cecinc.com

ECHO GREENWOOD, LLC
SMITH VALLEY ROAD RETAIL
SMITH VALLEY & MORGANTOWN ROAD
GREENWOOD, IN

STORMWATER POLLUTION PREVENTION NOTES

DATE:	AUGUST 9, 2022	DRAWN BY:	JAR
DWG SCALE:	N/A	CHECKED BY:	DRAFT
PROJECT NO:	322-045		
APPROVED BY:	DRAFT		

DRAWING NO.: **C903**

SEEDBED PREPARATION

1. APPLY LIME TO RAISE THE pH TO THE LEVEL AS NEEDED FOR SPECIES BEING SEEDED.
2. APPLY 23 POUNDS OF PHOSPHOROUS FREE FERTILIZER: 12–0–12 ANALYSIS (OR EQUIVALENT) PER 1000 SQ. FT. (APPROXIMATELY 1000 POUNDS PER ACRE) OR FERTILIZE ACCORDING TO TEST. APPLICATION OF 150 LBS. OF AMMONIUM NITRATE ON AREAS LOW IN ORGANIC MATTER AND FERTILITY WILL GREATLY ENHANCE VEGETATIVE GROWTH.
3. WORK THE FERTILIZER AND LIME INTO THE SOIL TO A DEPTH OF 2–4 INCHES WITH A HARROW, DISK OR RAKE OPERATED ACROSS THE SLOPE AS MUCH AS POSSIBLE.
4. STRAW MULCH MUST BE APPLIED WITH ANY SEEDING. SLOPES 6:1 OR GREATER AND STORM WATER CONVEYANCE SWALES MUST BE STABILIZED WITH EROSION CONTROL BLANKET.

SELECT A SEED MIXTURE BASED ON PROJECTED USE OF THE AREA (SEE PERMANENT SEED MIXTURE CHART). WHILE CONSIDERING BEST SEEDING DATES. IF PERMANENT SEEDING IS NOT PERMITTED USE TEMPORARY SEEDING UNTIL PERMANENT SEEDING CAN BE APPLIED. IF TOLERANCES ARE A PROBLEM, SUCH AS SALT TOLERANCE OF SEEDINGS ADJACENT TO STREETS AND HIGHWAYS, SEE SEED TOLERANCE CHART.

	SOIL CONDITION			SHADE TOLERANCE	CLOSE MOWING TO 2–3 1/2 INCHES	TRAMPING TOLERANCE	FERTILITY NEEDS	WINTER HARDINESS	FLOODING TOLERANCE (DAYS)	MATURE HEIGHT (INCHES)	EMERGENCE TIME (DAYS)	SOIL TOLERANCE		
	WET	NORM	DRY									GEN.	SOIL	SPRAY
CREEPING RED FESCUE FESTUCA RUBRA	2	1	2	1	1	1	MED.	1	20–25	12–18	7–21			S
KENTUCKY BLUEGRASS POA PROTINSIS	2	1	2	1	1	1	MED.	1	20–35	12–18	10–20			MT
PERENNIAL RYEGRASS LOLLUM PERENNE	2	1	2	–	1	2	MED. HIGH	2	15–20	12–18	5–10		MT	
RED CLOVER TRIFOLIUM PROTENSE	–	1	–	2	–	–	MED.	1	7–10	18	5–10	S	S	

RANKING:
1 GOOD
2 MEDIUM
– NOT TOLERANT

SALT TOLERANCE (TO BOTH SOIL SALTS & SPRAY)
T TOLERANCE
MT MEDIUM TOLERANCE
S SLIGHT TOLERANCE

TEMPORARY SEEDING

TYPE OF SEED	1000 SQ. FT.	ACRE	REMARKS
WHEAT OR RYE	3.5 LBS.	2 BU.	COVER SEED 1" TO 1 1/2" DEEP
SPRING OATS	2.3 LBS.	3 BU.	COVER SEED 1" DEEP
ANNUAL RYEGRASS	1 LB.	40 LB.	COVER SEED 1/4" DEEP

* NOT NECESSARY WHERE MULCH IS APPLIED.

PERMANENT SEEDING

	SEEDING RATE		SUITABLE pH	SITE SUITABILITY *		
	LBS/ACRE	LBS/1000 SQ. FT.		DROUGHTY	WELL DRAINED	WET
LEVEL AND SLOPING, OPEN AREAS						
RED CLOVER	5	.12				
KENTUCKY BLUEGRASS	15	.4	5.8–7.5	2	1	
CREEPING RED FESCUE	15	.4				
STEEP BANKS AND CUTS						
KENTUCKY BLUEGRASS	25	.6				
LAWNS AND HIGH MAINTENANCE AREAS						
KENTUCKY BLUEGRASS	40	.9	5.8–7.5	2	1	
CREEPING RED FESCUE	40	.9				
PERENNIAL RYEGRASS (TURF TYPE)	170	4.0	5.0–7.5		1	

* 1 – PREFERRED 2 – WILL TOLERATE

TEMPORARY SEEDING DATES

	JAN	FEB	MAR	APR	MAY	JUN	JUL	AUG	SEP	OCT	NOV	DEC
WHEAT OR RYE								(partly shaded)	(shaded)	(partly shaded)		
OATS			(shaded)	(shaded)	(partly shaded)							
ANNUAL RYEGRASS				(shaded)	(shaded)	(shaded)	(shaded)	(partly shaded)				

PERMANENT SEEDING DATES

	JAN	FEB	MAR	APR	MAY	JUN	JUL	AUG	SEP	OCT	NOV	DEC
NON–IRRIGATED*			(shaded)	(shaded)	(partly shaded)			(shaded)	(partly shaded)			
IRRIGATED			(shaded)	(shaded)	(shaded)	(shaded)	(shaded)	(shaded)	(shaded)			
DORMANT SEEDING **	(shaded)	(shaded)									(partly shaded)	(shaded)

IRRIGATION NEEDED DURING THIS PERIOD. TO CONTROL EROSION AT TIMES OTHER THAN IN THE SHADED AREAS. USE MULCH.

* LATE SUMMER SEEDING DATES MAY BE EXTENDED 5 DAYS IF MULCH IS APPLIED.

** INCREASE SEEDING APPLICATION BY 50%.

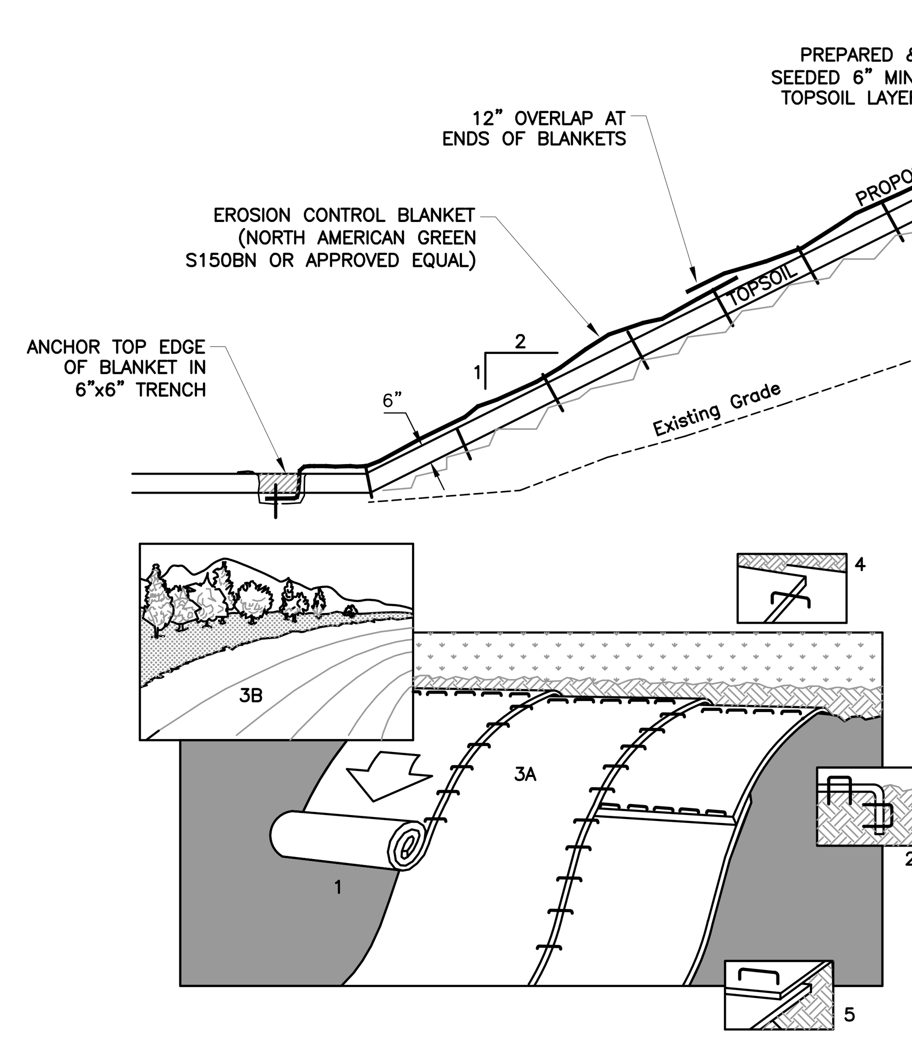

NOTES:

1. PREPARE SOIL BEFORE INSTALLING BLANKETS, INCLUDING APPLICATION OF LIME, FERTILIZER AND SEED.
2. BEGIN AT THE TOP OF THE SLOPE BY ANCHORING THE BLANKET IN 6" DEEP X 6" DEEP WIDE TRENCH. BACKFILL AND COMPACT THE TRENCH AFTER STAPLING.
3. ROLL THE BLANKETS (A) DOWN OR (B) HORIZONTALLY ACROSS THE SLOPE. THE EDGES OF PARALLEL BLANKETS MUST BE STAPLED WITH APPROX. 2 " OVERLAP.
4. WHEN BLANKETS MUST BE SLICED DOWN THE SLOPE, PLACE BLANKETS END OVER END (SHINGLE STYLE) WITH APPROX. 12" OVERLAP.
5. EROSION CONTROL BLANKETS SHALL BE INSTALLED ON ALL 3:1 SLOPED, OR STEEPER SLOPES WITH A MIN. OF 6" OF TOPSOIL.
6. SLOPE BLANKETS SHALL BE INSTALLED ON FILL SLOPES IMMEDIATELY AFTER EMBANKMENTS ARE ESTABLISHED. AT THE END OF EACH WORKING DAY. NO MORE THAN 10 FEET OF SOIL SHALL BE EXPOSED WITHOUT BLANKETS ON PERMANENT 3:1 FILL SLOPES.
7. CONTRACTOR SHALL INSTALL SUPER SILT FENCE ON 2:1 SLOPES AT 50 FEET (MAX.) INCREMENTS ALONG THE SLOPE LENGTH IN ACCORDANCE WITH THE EROSION AND SEDIMENTATION CONTROL PLANS AND DETAILS IMMEDIATELY AFTER EMBANKMENTS ARE ESTABLISHED.

DETAIL 906 - SLOPE BLANKET INSTALLATION

NOT TO SCALE

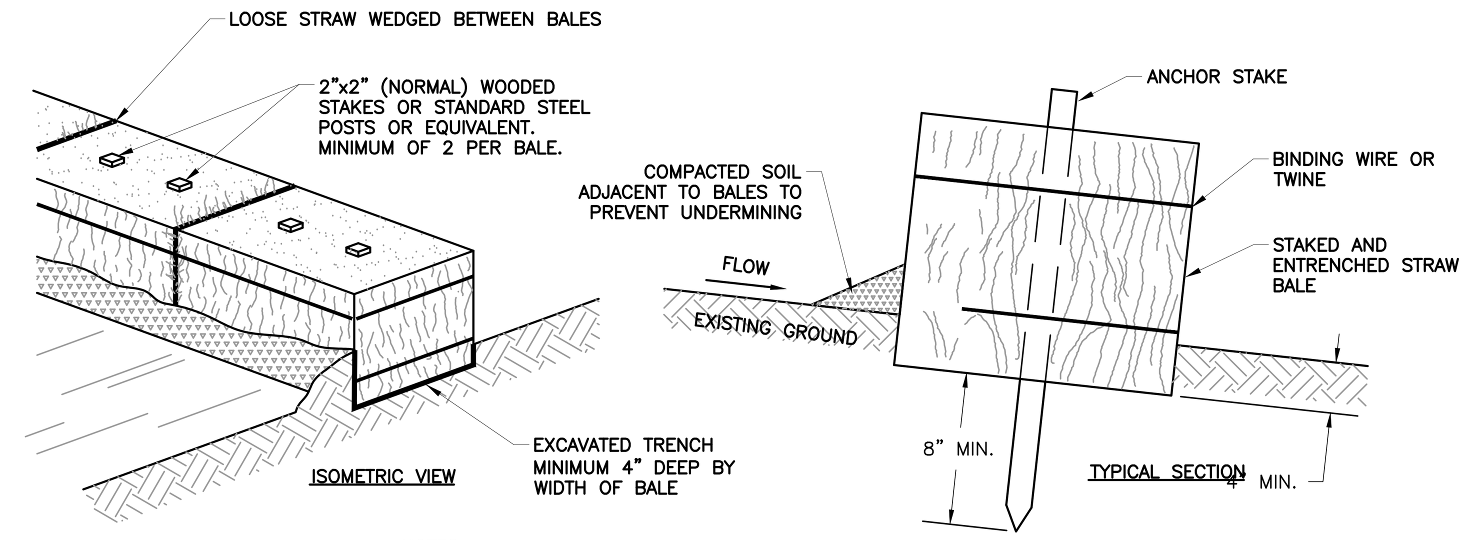

NOTES:

1. STRAW BALES ONLY TO BE USED AT CONCRETE WASH STATION AREA. REFER TO DETAIL.
2. THE STRAW BALES SHALL BE BUTTED TOGETHER AS TIGHTLY AS POSSIBLE.
3. THE FIRST ANCHORED BALE TO HELP CREATE A TIGHT FIT.

DETAIL 903 - STRAW BALE FOR CONCRETE WASHOUT

NOT TO SCALE

Staging Area TC

Categories

EC	Erosion Control	
SC	Sediment Control	x
TC	Tracking Control	✓
WE	Wind Erosion Control	
NS	Non-Stormwater Management Control	
WM	Waste Management & Materials Pollution Control	x

Legend:
✓ Primary Objective
x Secondary Objective

Targeted Pollutants

Sediment	✓
Nutrients	
Trash	✓
Metals	
Bacteria	
Oil and Grease	✓
Organics	

Potential Alternatives

None

Purpose

To provide a stabilized staging area for contractor parking, equipment, and material storage so contractors and other workers do not need to pull on to disturbed areas and contribute to tracking.

Applications & Limitations

Suitable applications:
- Applicable to all sites

Materials

Acceptable materials:
- Stone
- Existing pavement

Installation
- Install adjacent to and connect to construction entrance.
- Must be sized appropriately for construction activity.

Inspection/Maintenance
- Repair as necessary to provide stabilized area for contractor parking and material staging.

DETAIL 908 - CONSTRUCTION STAGING AREA

NOT TO SCALE

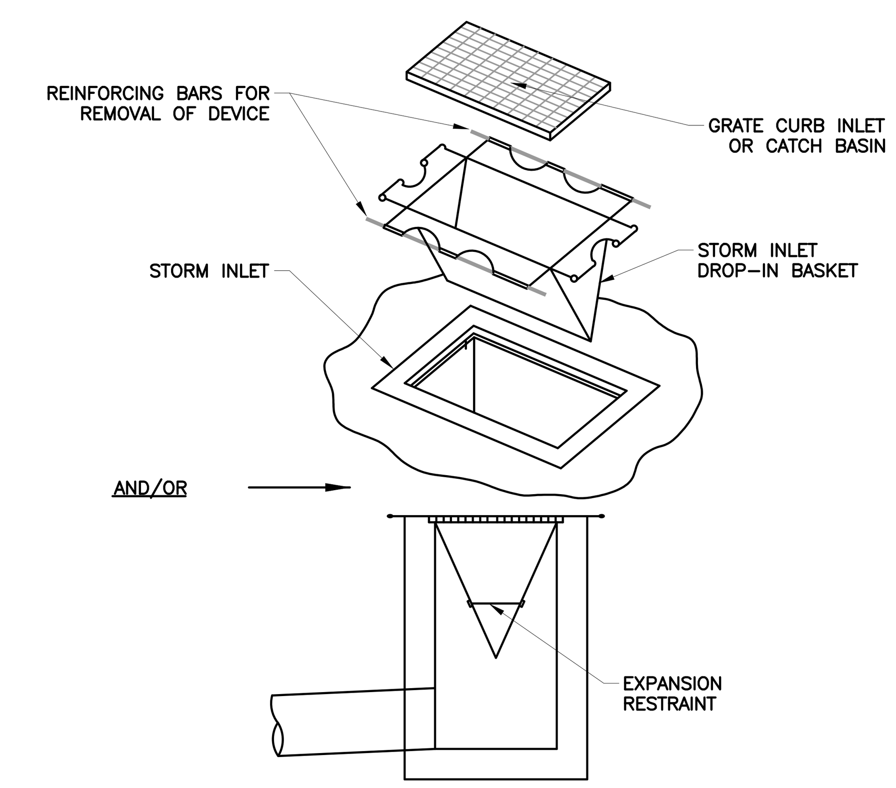

NOTE:

AS AN ALTERNATIVE, THE CONTRACTOR MAY SUBSTITUTE A COMMERCIAL GEOTEXTILE FILTER OR AN APPROVED EQUAL.

DETAIL 905 - PERMANENT EROSION CONTROL INLET PROTECTION FOR CURB INLET AND CATCH BASINS

NOT TO SCALE

NOTES:

1. ACTUAL LAYOUT DETERMINED IN FIELD.
2. THE CONCRETE WASHOUT SIGN SHALL BE INSTALLED WITHIN 30 FT. IF THE TEMPORARY CONCRETE WASHOUT FACILITY.

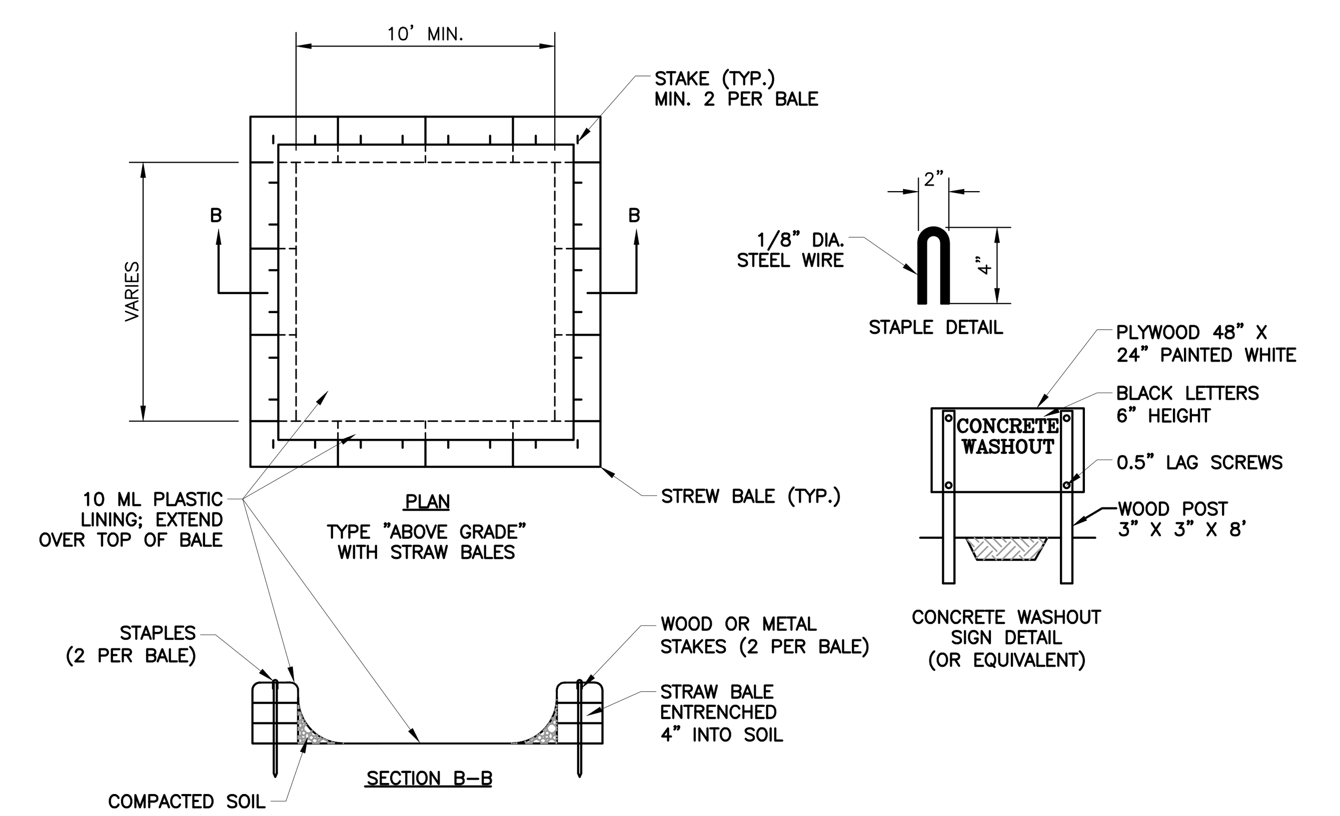

DETAIL 902 - CONCRETE WASHOUT BMP

NOT TO SCALE

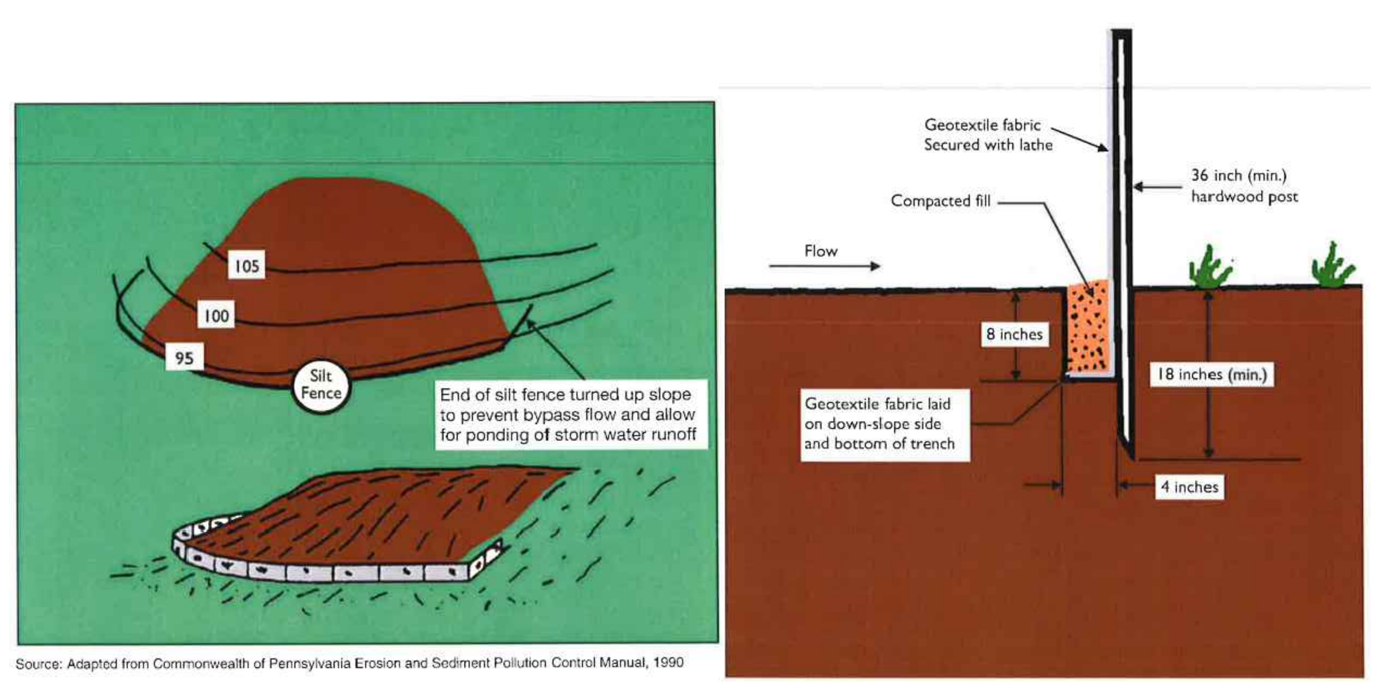

SILT FENCE MUST BE NWSF–6 NON–WOVEN FABRIC OR AN APPROVED EQUAL

DETAIL 907 - SILT FENCE

NOT TO SCALE

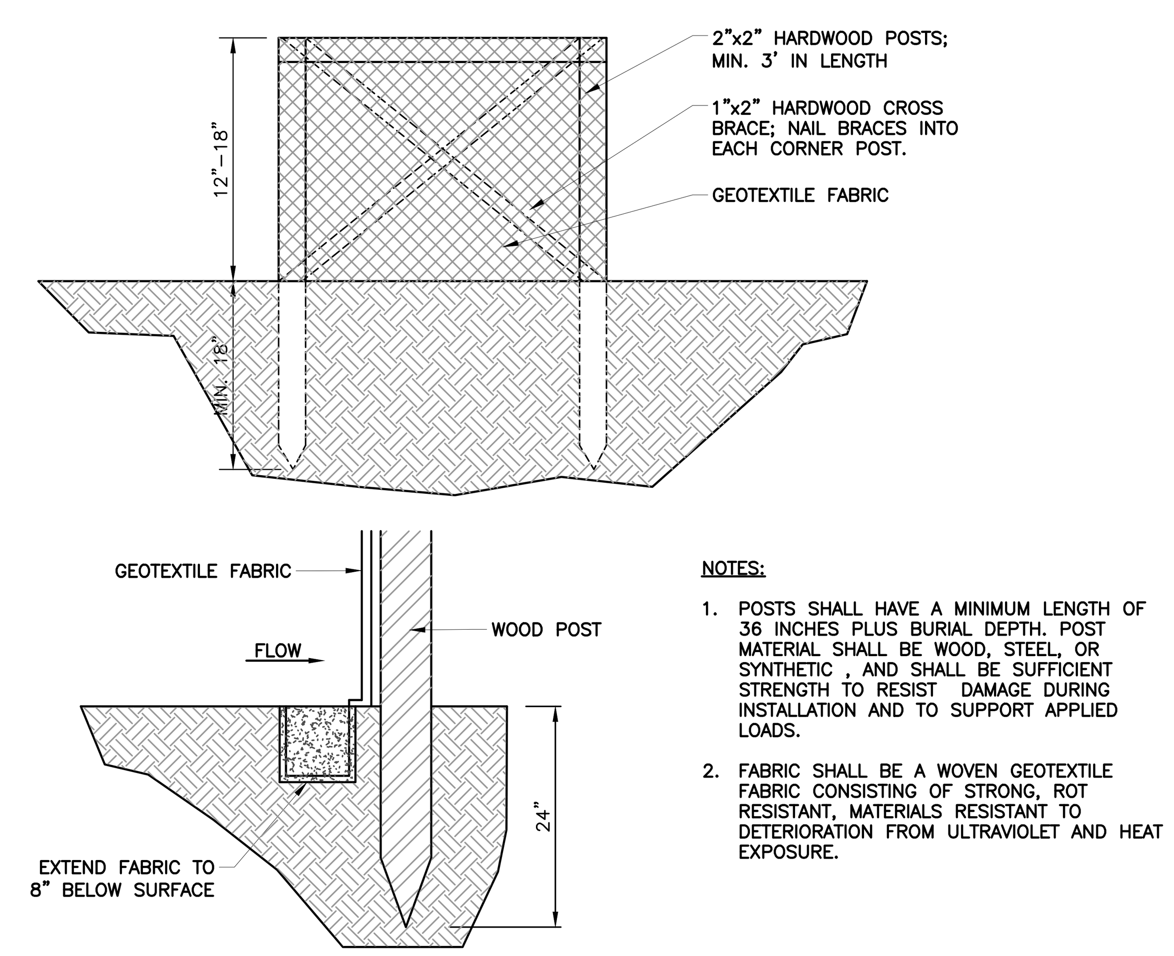

NOTES:

1. POSTS SHALL HAVE A MINIMUM LENGTH OF 36 INCHES PLUS BURIAL DEPTH. POST MATERIAL SHALL BE WOOD, STEEL, OR SYNTHETIC , AND SHALL BE SUFFICIENT STRENGTH TO RESIST DAMAGE DURING INSTALLATION AND TO SUPPORT APPLIED LOADS.
2. FABRIC SHALL BE A WOVEN GEOTEXTILE FABRIC CONSISTING OF STRONG, ROT RESISTANT, MATERIALS RESISTANT TO DETERIORATION FROM ULTRAVIOLET AND HEAT EXPOSURE.

DETAIL 904 - NON-PAVED AREA CATCH BASIN INLET PROTECTION DETAIL

NOT TO SCALE

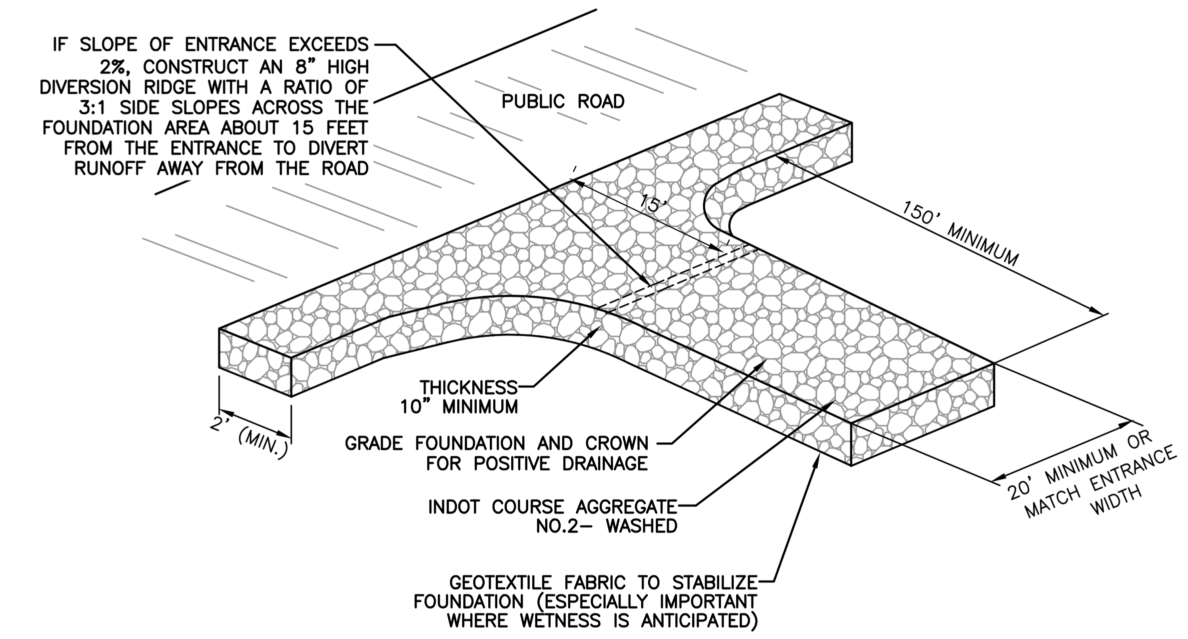

DETAIL 901 - TEMPORARY CONSTRUCTION ENTRANCE

NOT TO SCALE

PRELIMINARY
NOT FOR CONSTRUCTION

Indiana 811 — Know what's below. Call before you dig.

NICHOLAS P. JUSTICE
REGISTERED
No. PE11800753
STATE OF INDIANA
PROFESSIONAL ENGINEER
08/09/2022

SUBMITTAL & REVISION RECORD

NO	DATE	DESCRIPTION

Civil & Environmental Consultants, Inc.
530 E. Ohio Street · Suite G - Indianapolis, IN 46204
317-655-7777 · 877-746-0749
www.cecinc.com

ECHO GREENWOOD, LLC
SMITH VALLEY ROAD RETAIL
SMITH VALLEY & MORGANTOWN ROAD
GREENWOOD, IN

STORMWATER POLLUTION PREVENTION DETAILS

DATE:	AUGUST 9, 2022	DRAWN BY:	JAR
DWG SCALE:	AS NOTED	CHECKED BY:	DRAFT
PROJECT NO:	322-045	APPROVED BY:	DRAFT

DRAWING NO.: C904

P:\320-000\322-045\-CADD\Dwg\CV01\322045-CV01-C900.dwg{C904} LS:(8/9/2022 - jredman) - LP: 8/9/2022 2:48 PM